Dr. Patrick Gardner

Water Collecting Device

Western Carolina University
School of Engineering + Technology

Problem Statement

- The current water collection device does not do the intended job of collecting water. The system leaks and does not store the water properly. The biggest problem to solve is how to collect water without the device

Requirements

- Key Requirements of device
  - Collect water samples
  - Water resistant
  - Lightweight
  - Accessible
  - Easy to use

Concepts

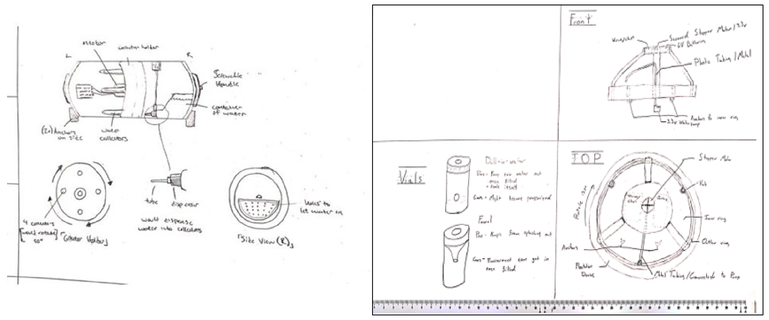

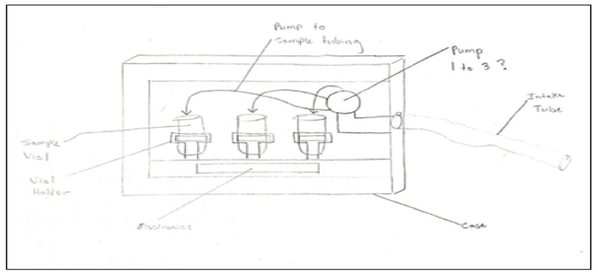

Final Design

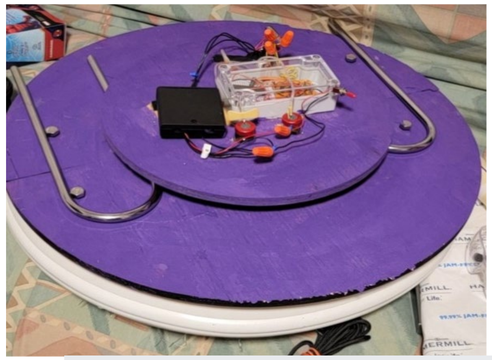

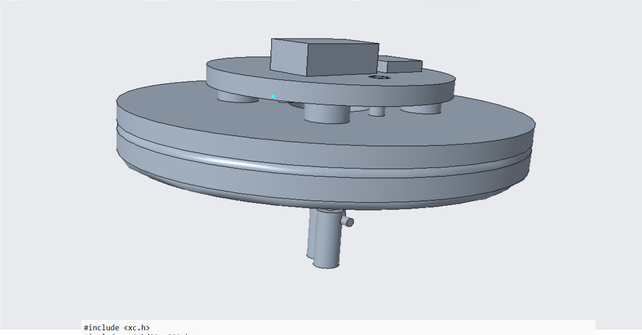

```
#include <xc.h>
#include <p24hj32gp302.h>
#include <stdio.h>
#define FCY 3700000UL  // frequency 3.7 Mhz
#include <libpic30.h>
#pragma config FWDTEN = OFF            // Watchdog Timer Enable (Watchdog timer enabled/disabled by user software)


int main(void){

    ADIPCFGL=0xffff;
    TRISB=0x0000;
    TRISBbits.TRISB0=1;


    while(1){
        if (PORTBbits.RB0==1){  // gonna change to RB 11 for 5 volt

            __delay_ms (3000);

          PORTBbits.RB9=1;
          __delay_ms (30000);
          PORTBbits.RB9=0;
          __delay_ms (3000);

          PORTBbits.RB8=1;
          __delay_ms (30000);
          PORTBbits.RB8=0;
         __delay_ms (3000);

          PORTBbits.RB7=1;
          __delay_ms (30000);
          PORTBbits.RB7=0;
          __delay_ms (10);


        }
      else if (PORTBbits.RB0==0){
      }


    }

    return 0;
}
```

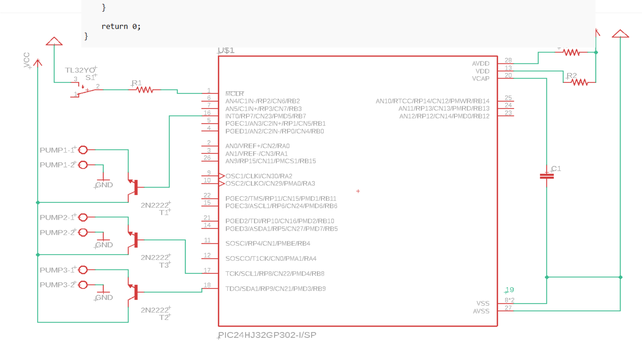

Results

- The device can collect water before the controller resets and puts it in a loop between keeping pump 1 running or occasionally running pump 2 before resetting.

Summary

- The team that was able to create a prototype of a device that is user friendly and easy to use that only needs to be improved in water proofing and electronics
- The device can collect water

Team & Acknowledgements

- Francisco Cazares - ECET
- Daniel Dowling - ECET
- Brian Johnson - ECET
- Isaiah Lipscomb - ET
- Zachary Ilch - ET
- Patrick Gardner – Mentor & Sponsor