Mechanical Positioning Device for Antenna Optics Focusing

Western Carolina University
School of Engineering + Technology

Problem Statement

Objectives:

1. Implement a reliable solution that improves workflow and is easy for operator use.
2. Develop a solution to replace the use of cloth tape measures to set the initial feed horn position relative to the reflector.
3. Develop a test procedure for the sponsor to follow.
4. Provide documentation on the design process leading up to the final product.

Requirements

1. Ease of usage
2. Versatility
3. Accuracy
4. Repeatable Process
5. No Part Interference
6. Must Fit in Production Process

Concepts

- Concepts for the project included:
  - Laser measurement
  - Telescopic Rods
  - Ultrasonic Measurement

  During the analysis of alternatives, the team found that the telescopic rods and laser measurement options were the highest rated.

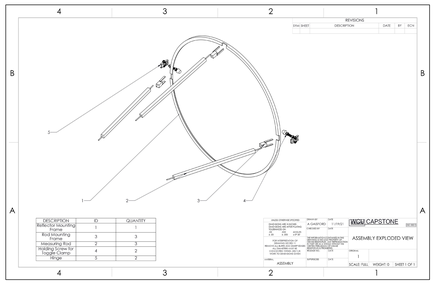

Figure 1: Concept 1 -Circular Mounting Frame w/ Rods

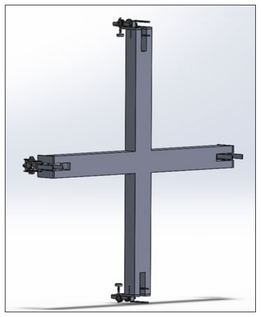

Figure 2: Concept 2 - Cross-Frame with Measuring Rods

Final Design

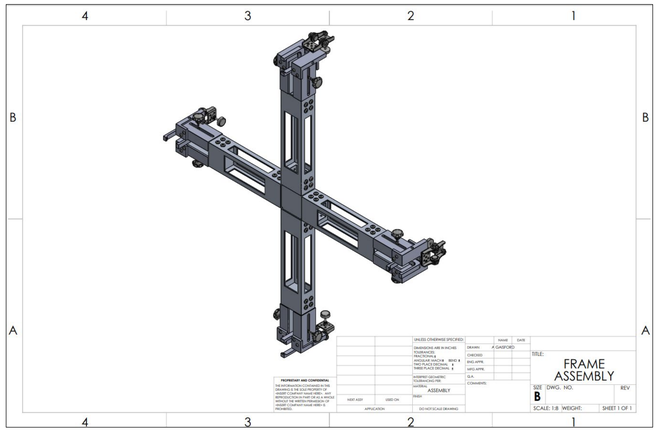

Figure 3: Final Concept - Cross Frame with Laser Measuring Devices

- Originally the team wanted to fabricate the frame with 6061 aluminum but after discussion with the machine shop other methods needed to be considered.
- To create a prototype the team used the makerspace lab and 3D printed parts as needed.

(a) Side Clip Assembly

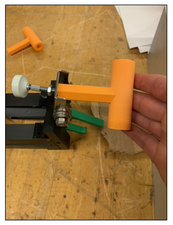

(b) Clamp Adjustment Tool

(c) Laser Clip Part w/ Laser Measuring Device

(d) Side End Piece w/ Ball Joint Mount

Figure 4: Different Assembled Components and Tools

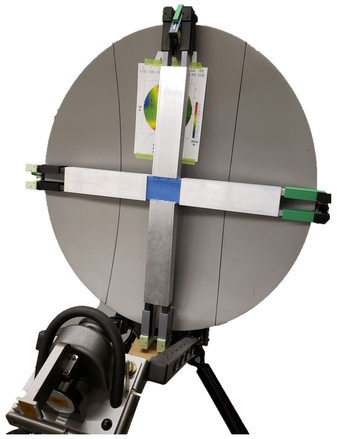

Figure 5: Cross Frame on Antenna Dish

Results

Focal Length: 20.36						
Measurement	Nominal	Tape Measure	Laser Measure	With Offset taken out	Device Measure	Departure from Nominal
A	18.95	19	18.781	18.281		18.95
B	20.95	21	21	20.5		20.95
C	34.42	34.125	34.75	34.25	33.281	1.139
D	32.84	32.875	33.344	32.844	32	0.84
E	25.5	25.5	26.5	26		25.5
G	25.5	25.5	26.5	26		25.5

Table 1: Accuracy Results

- The team calculated that the offset of the antenna is 1 inch. With that considered, all of the measurements fall within the error margin of 0.5 inches.
- Additionally, the team conducted time tests to see how quickly a measurement could be taken. The team found that the time to setup and take a measurement was between 1-2 minutes, this time is well below the requirement of 15 minutes.

Summary

- The problem started with several possible solutions which, following the constraints, narrowed down to the use of a cross frame and laser measuring devices.
- The frame went through several design iterations ranging from one component to several, ultimately resulting in a size versatile frame.
- Results of the design's performance show promising optimization of the previous measuring process and meets all constraints.

Team & Acknowledgements

- Adam Gaisford, BS of Mechanical Engineering
- Diego Valenzuela, BS of Mechanical Engineering
- Drake Jimison, BS of Electrical Engineering
- Trevor Childers, BS of Mechanical Engineering

- Sponsors: Charlie Putnam and Jason Profitt
- Mentor: Dr. Scott Pierce