excelENT LLC

BreathEazy: A Radio Frequency Device for Nasal Tissue Modification

Western Carolina University
School of Engineering + Technology

Problem Statement

According to the St. Louis Sinus Center, 20 million Americans suffer from chronic nasal airway obstruction causing symptoms like congestion, fatigue, and postnasal drip, which lead to a decline in health-related quality of life. While it is commonly treated using balloon-assisted cryoablation and RF ablation, most devices present limitations like bulkiness or high cost and can induce long term undesirable effects in patients.

Our task was to investigate the feasibility of making a device that marries the strong aspects of existing devices. We designed a power board with the characteristics of an RF ablation device, that delivers RF energy to flexible electrodes attached to a balloon. Thus, we proved the feasibility of developing a handheld, single use, battery powered device designed for balloon assisted RF ablation.

Requirements

- Handheld
- Disposable
- Temperature Control
- Consistent Frequency
- Less than $100
- Ability to inflate/deflate balloon
- Output power of 4W (Io = 100mA, Vo-rms = 40V)
- Functioning time of at least 3 minutes

Concepts

- Initially, the team intended to realize the power board by producing the frequency using an oscillator circuit with an Arduino Uno microcontroller. However, it became apparent that the design would not be able to deliver the desired power.
- Also, we contemplated the use of a peristaltic pump to automatically inflate and deflate the balloon, but this approach was replaced by the sponsor's suggestion to use a manual syringe.
- The scope of the project moved from integrating the electronics into a handheld enclosure to focusing on the power board, as we realized that generating the required power on a small PCB was the hardest and most important part of the project.
- After exploring some ideas and consulting our sponsor and mentor, we selected the best idea using score tables.

Final Design

Description:

The final design consists of a battery powered PIC micro controller, a class C amplifier, a current amplifier, and two battery powered boost converters. The PIC microcontroller delivers a 480kHz, 1V sine wave to the class C amplifier and is powered using a Lithium Battery. The boost converters are used to create a +/- 60V dual rail which in turn powers the class C amplifier and the current amplifier stages. The output is then delivered to the tissue via flex electrodes. Should the tissue temperature exceed 60 ℃, the frequency is shut down by the PIC, which in turn shuts down the circuit.

Schematic

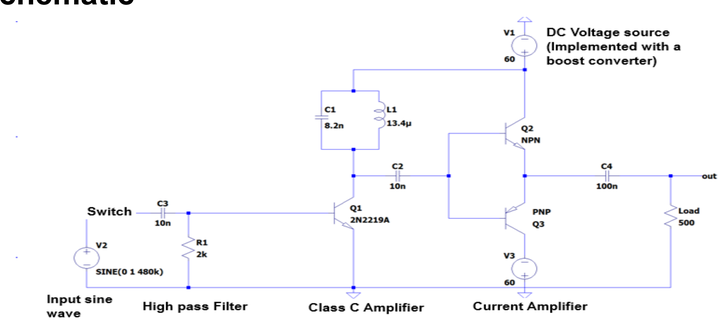

- **Simulation results:**
  - Pout = 4.3 W,
  - Vo-rms = 42V,
  - Io = 120mA
- **Test circuit based on schematic**

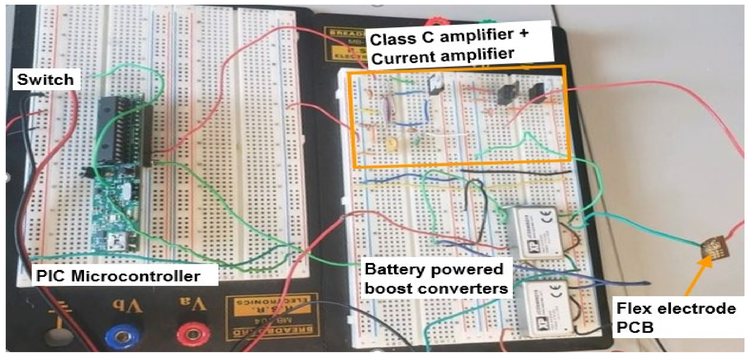

- **Flex PCB Electrodes**

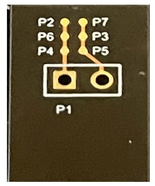

Results

- **Test conditions**: Vin = +/-30V, f = 411kHz
- **Results:** Pout = 1.8 W, Vo-peak= 32V, Io = 88mA
- **Output Voltage waveform**

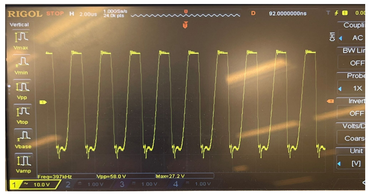

- **Egg white test:** A small quantity of egg white was placed on the flex electrode to test the circuit. After **15s,** the color, texture, and temperature had changed.

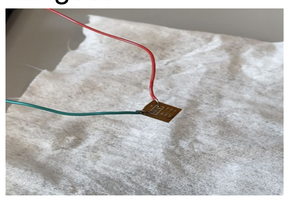

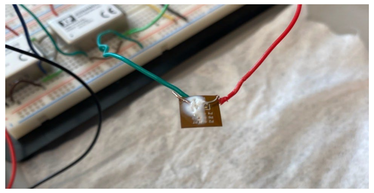

Summary

- We provided a viable design for the BreathEazy device's power board.
- The test circuit heated up the egg white, which was used as a substitute for liver tissue to test circuit functionality.
- While the test performed produced a power lower than specified, simulation results prove that it is possible to meet the design specifications using a higher power boost converter.
- **Future work:** Increase thermocouple sensitivity, and test circuit with a 480kHz input waveform and +/- 60V dual rail.

Team & Acknowledgements

Students:

- Zoulaiha Daouda – B.S. EE
- Chris Dills – B.S. ECET
- Jacovi James – B.S. ECET
- Zachary Shuler – B.S. EE

Sponsor: Kashif Mazhar, MD, MSc, CEO/Founder excelENT LLC

Faculty Mentor: Andrew Ritenour, PhD. , Assistant Professor and Rapid Center Fellow