STILLWELL BUILDING
HVAC CONTROLS REPLACEMENT
WESTERN CAROLINA UNIVERSITY

246 CENTRAL DRIVE, CULLOWHEE, NC 28723

BID DOCUMENTS

MARCH 2, 2023

SCO ID: 22-24466-01A

M&C PROJECT #07020-0003

INDEX OF DRAWINGS

GENERAL

CS01 - COVER SHEET

G001 - BUILDING CODE SUMMARY

MECHANICAL

M001 - MECHANICAL GENERAL NOTES, LEGENDS, ABBREVIATIONS, AND APPENDIX B SUMMARY

M101 - FIRST FLOOR LAB WING AREA A DEMOLITION PLAN

M102 - SECOND FLOOR LAB WING AREA A DEMOLITION PLAN

M103 - THIRD FLOOR LAB WING AREA A DEMOLITION PLAN

M104 - FOURTH FLOOR LAB WING AREA A DEMOLITION PLAN

M105 - PENTHOUSE AREA A DEMOLITION PLAN

M201 - FIRST FLOOR LAB WING AREA A NEW WORK PLAN

M202 - SECOND FLOOR LAB WING AREA A NEW WORK PLAN

M203 - THIRD FLOOR LAB WING AREA A NEW WORK PLAN

M204 - FOURTH FLOOR LAB WING AREA A NEW WORK PLAN

M205 - PENTHOUSE AREA A NEW WORK PLAN

M301 - MECHANICAL CONTROLS SCHEMATICS

M302 - MECHANICAL CONTROLS SCHEMATICS

M303 - MECHANICAL CONTROLS SCHEMATICS

M304 - MECHANICAL CONTROLS SCHEMATICS

M305 - MECHANICAL CONTROLS SCHEMATICS

M501 - MECHANICAL DETAILS

M601 - MECHANICAL SCHEDULES

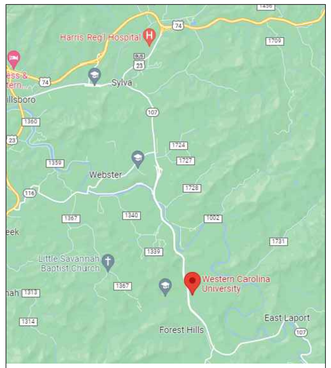

AREA MAP

VICINITY MAP

MECHANICAL ENGINEERS

McKIM & CREED

51 Thompson St, Suite D
Asheville, NC 28803
Phone: (828) 252-8181
NC License# F-1222
www.mckimcreed.com

McKIM & CREED
Venture IV Building, Suite 500
3737 Glenwood Avenue
Raleigh, North Carolina 27606
Phone: (919) 233-8091, Fax: (919) 233-8031
www.mckimcreed.com

Western Carolina University

NORTH CAROLINA PROFESSIONAL ENGINEER SEAL 045325 TERRY M. THIGPEN 3-1-23

REV	REVISION DESCRIPTION	DATE

STILLWELL BUILDING
HVAC CONTROLS REPLACEMENT
WESTERN CAROLINA UNIVERSITY

SCO ID: 22-24466-01A
CODE: 42126 ITEM: 316

DATE	3/2/2023
M&C PROJ. #	07020-0003
DRAWN	JMT
DESIGNED	SMT
CHECKED	WTR
PROJ. MGR	WTR

SCALE

HORIZONTAL:
AS NOTED

VERTICAL:
N/A

BID DOCUMENTS

COVER SHEET

CS01

I:\07020\0003\ENG\BIDDRAWINGS\BIDGENERAL\SHEETS\CS01.DWG, 3/1/2023 2:55:59 PM, BEN CARVER

2018 APPENDIX B - BUILDING CODE SUMMARY FOR ALL COMMERCIAL PROJECTS:

(EXCEPT 1 AND 2-FAMILY DWELLINGS AND TOWNHOUSES)

Name of Project: STILLWELL BUILDING - HVAC CONTROLS REPLACEMENT - WESTERN CAROLINA UNIVERSITY
Address: 246 CENTRAL DRIVE, CULLOWHEE, NORTH CAROLINA Zip Code: 28723

Owner / Authorized Agent: WCU / DANIEL FISKEAUX Phone # (828) 227 - 3020 E-Mail DFISKEAUX@WCU.EDU
Owned By: ☐ City/County ☐ Private ■ State
Code Enforcement Jurisdiction: ☐ City ______ ☐ County ______ ■ State ______

CONTACT:

DESIGNER	FIRM	NAME	LICENSE #	TELEPHONE #	E-MAIL
Architectural					
Civil					
Electrical					
Fire Alarm					
Plumbing					
Mechanical	McKim & Creed	Steven M. Thigpen	045325	(919) 233-8091	sthigpen@mckimcreed.com
Sprinkler-Standpipe					
Structural					
Retaining Walls>5' High					
Other					

2018 NC CODE FOR:

☐ New Construction ☐ Addition
☐ 1st Time Interior Completion
☐ Shell / Core
☐ Phased Construction - Shell / Core
■ Renovation

2018 NC EXISTING BUILDING CODE:

☐ Prescriptive ☐ Repair ☐ Chapter 14
Alteration: ☐ Level I ☐ Level II ☐ Level III
☐ Historic Property ☐ Change of Use

CONSTRUCTED: (date) 1950 ORIGINAL OCCUPANCY(S) (Ch. 3): BUSINESS
RENOVATED: (date) 2021 CURRENT OCCUPANCY(S) (Ch. 3): BUSINESS (NO CHANGE)
RISK CATEGORY (table 1604.5) Current: ☐ I ☐ II ■ III ☐ IV
Proposed: ☐ I ☐ II ■ III ☐ IV

BASIC BUILDING DATA

EXISTING NO CHANGE

Construction Type: (check all that apply) ☐ I-A ☐ II-A ☐ III-A ☐ IV ☐ V-A ☐ I-B ■ II-B ☐ III-B ☐ V-B

Sprinklers: ☐ No ☐ Partial ■ Yes ■ NFPA 13 ☐ NFPA 13R ☐ NFPA 13D
Standpipes: ☐ No ■ Yes Class ■ I ☐ II ☐ III ☐ Wet ☐ Dry
Fire District: ■ No ☐ Yes (Primary) Flood Hazard Area: ■ No ☐ Yes
Special Inspections Required: ■ No ☐ Yes

EXISTING NO CHANGE

Gross Building Area:

FLOOR	EXISTING (SQ FT)	NEW (SQ FT)	SUB-TOTAL
PENTHOUSE	4,930		4,930
4TH FLOOR	25,360		25,360
3RD FLOOR	25,360		25,360
2ND FLOOR	25,897		25,897
1ST FLOOR	23,787		23,787
TOTAL:	105,334		105,334

ALLOWABLE AREA

EXISTING NO CHANGE

Primary Occupancy Classification: SELECT ONE
- Assembly ☐ A-1 ☐ A-2 ☐ A-3 ☐ A-4 ☐ A-5
- Business ■
- Educational ☐
- Factory ☐ F-1 Moderate ☐ F-2 Low
- Hazardous ☐ H-1 Detonate ☐ H-2 Deflagrate ☐ H-3 Combust ☐ H-4 Health ☐ H-5 HPM
- Institutional ☐ I-1 Condition ☐ 1 ☐ 2; ☐ I-2 Condition ☐ 1 ☐ 2; ☐ I-3 Condition ☐ 1 ☐ 2 ☐ 3 ☐ 4 ☐ 5; ☐ I-4
- Mercantile ☐
- Residential ☐ R-1 ☐ R-2 ☐ R-3 ☐ R-4
- Storage ☐ S-1 Moderate ☐ S-2 Low ☐ High-piled; ☐ Parking Garage ☐ Open ☐ Enclosed ☐ Repair Garage
- Utility and Miscellaneous ☐

Accessory Occupancy Classification(s): ______
Incidental Uses (Table 509): ______
Special Uses (Chapter 4 - List Code Sections): ______
Special Provisions: (Chapter 5 - List Code Sections): ______

Mixed Occupancy: ■ No ☐ Yes Separation: ______ Hr. Exception: ______

■ Non-Separated Use (508.3)
The required type construction for the building shall be determined by applying the height and area limitations for each of the applicable occupancies to the entire building. The most restrictive type of construction, so determined, shall apply to the entire building.

☐ Separated Use (508.4) - See below for area calculations
See below for area calculations for each story, the area of the occupancy shall be such that the sum of the ratios of the actual floor area of each use divided by the allowable floor area for each use shall not exceed 1.

$$\frac{\text{Actual Area of Occupancy A}}{\text{Allowable Area of Occupancy A}} + \frac{\text{Actual Area of Occupancy B}}{\text{Allowable Area of Occupancy B}} \leq 1$$

______ + ______ + ... = ______ $\leq$1.00

EXISTING NO CHANGE

STORY NO.	DESCRIPTION AND USE	(A) BLDG AREA PER STORY (ACTUAL)	(B) TABLE 506.2[4] AREA	(C) AREA FOR FRONTAGE INCREASE[1, 5]	(D) ALLOWABLE AREA PER STORY OR UNLIMITED[2, 3]
1	B	23,787 SF	69,000 SF		69,000 SF
2	B	25,897 SF	69,000 SF		69,000 SF
3	B	25,360 SF	69,000 SF		69,000 SF
4	B	25,360 SF	69,000 SF		69,000 SF

[1] Frontage area increases from Section 506.3 are computed thus:
a. Perimeter which fronts a public way or open space having 20 feet minimum width = ______ (F)
b. Total Building Perimeter = ______ (P)
c. Ratio (F/P) = ______ (F/P)
d. W = Minimum width of public way = ______ (W)
e. Percent of frontage increase I_f = 100[F/P - 0.25] x W/30 = ______ (%)
[2] Unlimited area applicable under conditions of Section 507.
[3] Maximum Building Area = total number of stories in the building x D (maximum 3 stories) (506.2).
[4] The Maximum area of open parking garages must comply with Table 406.5.4.
[5] Frontage increase is based on the unsprinklered area value in Table 506.2.

ALLOWABLE HEIGHT

EXISTING NO CHANGE

	ALLOWABLE (TABLE 503)	SHOWN ON PLANS	CODE REFERENCE
Building Height in Feet (Table 504.3)	74'	58' (EXISTING)	
Building Height in Stories (Table 504.4)	4	4 (EXISTING)	

[1] Provide code reference if the "Show on Plans" quantity is not based on Table 504.3 or 504.4.
[2] The maximum height of air traffic control towers must comply with Table 412.3.1
[3] The maximum height of open parking garages must comply with Table 406.5.4

FIRE PROTECTION REQUIREMENTS

EXISTING NO CHANGE

BUILDING ELEMENT	FIRE SEPARATION DISTANCE (FEET)	RATING REQ'D	RATING PROVIDED (W/__* REDUCTION)	DETAIL # AND SHEET #	DESIGN # FOR RATED ASSEMBLY	DESIGN # FOR RATED PENETRATION	DESIGN # FOR RATED JOINTS
Structural frame, including columns, girders, trusses		0					
Bearing walls		0					
Exterior		0					
North		0					
East		0					
West		0					
South		0					
Interior		0					
Nonbearing walls and partitions Exterior Walls							
North	0	3	3 (EXISTING)	EXISTING	U415	W-L-529	HW-D-0003
East	0	3	3 (EXISTING)	EXISTING	U415	WL2168, WL2169	HW-D-0060
West	0	3	3 (EXISTING)	EXISTING	U415	W-L-529	HW-D-0003
South	>30	0					
Interior walls and partitions							
Floor construction Including supporting beams and joists		0					
Floor Ceiling Assembly		0					
Column Supporting Floors		0					
Roof construction Including supporting beams and joists		0					
Roof Ceiling Assembly		0					
Column Supporting Roof		0					
Shafts Enclosures - Exit		2	2 Exits, EX 12" Masonry			N/A	
Shafts Enclosures - Other		2		EXISTING	U415B	W-L-1054	
Corridor Separation - Academic Wing		1	0, Table 1020.1 w/ sprinklers	EXISTING		W-L-1054	
Corridor Separation - Lab Wing		1	1	EXISTING	U465	W-L-1054	
Occupancy/Fire Barrier Separation		2	2	EXISTING	U419	W-L-1054	
Party/Fire Wall Separation		3	3	EXISTING	U419	WL2168, WL2169	
Smoke Barrier Separation		N/A					
Smoke Partition		N/A					
Tenant/Dwelling Unit/ Sleeping Unit Separation		N/A					
Incidental Use Separation		N/A					

* Indicate section number permitting reduction

PERCENTAGE OF WALL OPENING CALCULATIONS

EXISTING NO CHANGE

FIRE SEPARATION DISTANCE (FEET FROM PROPERTY LINES	DEGREES OF OPENINGS PROTECTION (TABLE 705.8)	ALLOWABLE AREA (%)	ACTUAL SHOWN ON PLANS (%)
<3'	PROTECTED	0	0
3'<20'	LIMITED BY AREA	15-75	0
>20'	UNPROTECTED, SPRINKLERED	NO LIMIT	EX OPENINGS ARE ALL >20'

LIFE SAFETY SYSTEM REQUIREMENTS

EXISTING NO CHANGE

Emergency Lighting: ☐ No ■ Yes
Exit Signs: ☐ No ■ Yes
Fire Alarm: ☐ No ■ Yes
Smoke Detection Systems: ☐ No ■ Yes ☐ Partial ______
Carbon Monoxide Detection: ☐ No ☐ Yes

LIFE SAFETY PLAN REQUIREMENTS

EXISTING NO CHANGE

Life Safety Plan Sheet #: N/A - NO CHANGE
- ☐ Fire and/or smoke rated wall locations (Chapter 7)
- ☐ Assumed and real property line locations (if not on the site plan)
- ☐ Exterior wall opening area with respect to distance to assumed property lines (705.8)
- ☐ Occupancy types for each area as it relates to occupant load calculation (Table 1004.1.2)
- ☐ Occupancy loads for each area
- ☐ Exit access travel distances (1017)
- ☐ Common path of travel distances (1006.2.1 & 2006.3.2(1))
- ☐ Dead end lengths (1020.4)
- ☐ Clear exit widths for each exit door
- ☐ Maximum calculated occupant load capacity each exit door can accommodate based on egress width (1005.3)
- ☐ Actual occupant load for each exit door
- ☐ A separate schematic plan indicating where fire rated floor/ceiling and/or roof structure is provided for purposes of occupancy separation and supporting construction for a fire barrier/fire partition/smoke barrier.
- ☐ Location of doors with panic hardware (1010.1.10)
- ☐ Location of doors with delayed egress locks and the amount of delay (1010.1.9.7)
- ☐ Location of doors with electromagnetic egress locks (1010.1.9.9)
- ☐ Location of doors equipped with hold-open devices
- ☐ Location of emergency escape windows (1030)
- ☐ The square footage of each fire area (202)
- ☐ The square footage of each smoke compartment for Occupancy Classification I-2 (407.5)
- ☐ Note any code exceptions or table notes that may have been utilized regarding the items above

Section/Table/Note	Title

ACCESSIBLE DWELLING UNITS (SECTION 1107)

EXISTING NO CHANGE

TOTAL UNITS	ACCESSIBLE UNITS REQUIRED	ACCESSIBLE UNITS PROVIDED	TYPE A UNITS REQUIRED	TYPE A UNITS PROVIDED	TYPE B UNITS REQUIRED	TYPE B UNITS PROVIDED	TOTAL ACCESSIBLE UNITS PROVIDED

ACCESSIBLE PARKING (SECTION 1106)

EXISTING NO CHANGE

LOT OR PARKING AREA	TOTAL # OF PARKING SPACES: REQUIRED	TOTAL # OF PARKING SPACES: PROVIDED	# OF ACCESSIBLE SPACES PROVIDED: REGULAR WITH 5' ACCESS AISLE	VAN SPACES WITH 132" ACCESS AISLE	VAN SPACES WITH 8' ACCESS AISLE	TOTAL # ACCESSIBLE PROVIDED
	0	20 (EXISTING)			1 (EXISTING)	1
TOTAL		20			1	1

PLUMBING FIXTURE REQUIREMENTS (TABLE 2902.1)

EXISTING NO CHANGE

USE		WATERCLOSETS MALE	WATERCLOSETS FEMALE	WATERCLOSETS UNISEX	URINALS	LAVATORIES MALE	LAVATORIES FEMALE	LAVATORIES UNISEX	SHOWERS/ TUBS	DRINKING FOUNTAINS REGULAR	DRINKING FOUNTAINS ACCESSIBLE
SPACE	EXISTING	15	26		14	14	14			12	12
	NEW										
	REQUIRED	15	16			10	10			5	5

SPECIAL APPROVALS

EXISTING NO CHANGE

Special Approval: (Local Jurisdiction, Department of Insurance, SCO, DPI, DHHS, ICC, etc., describe below)

ENERGY SUMMARY

EXISTING NO CHANGE

ENERGY REQUIREMENTS:
The following data shall be considered minimum and any special attribute required to meet the North Carolina Energy Conservation Code shall also be provided. Each Designer shall furnish the required portions of the project information for the plan data sheet. If performance method, state the annual energy cost for the standard reference design vs annual energy cost for the proposed design.

Existing building envelope complies with code: ■ No ☐ Yes (The remainder of this section is not applicable)
Exempt Building: ■ No ☐ Yes (Provide Code or Statutory reference) ______

Climate Zone: ☐ 3A ■ 4A ☐ 5A

Method of Compliance: Energy Code ☐ Performance ■ Prescriptive
ASHRAE 90.1 ☐ Performance ☐ Prescriptive
(If "Other" specify source here) ______

THERMAL ENVELOPE (Prescriptive method only)

Roof/ceiling Assembly (each assembly)
- Descriptive of assembly: EXISTING TO REMAIN
- U-Value of total assembly: ______
- R-Value of insulation: ______
- Skylights in each assembly: ______
- U-Value of skylight: ______
- total square footage of skylights in each assembly: ______

Exterior Walls (each assembly)
- Descriptive of assembly: EXISTING TO REMAIN
- U-Value of total assembly: ______
- R-Value of insulation: ______
- Openings (windows or doors with glazing)
  - U-Value of assembly: ______
  - Solar heat gain coefficient: ______
  - Projection factor: ______
  - Door R-Values: ______

Walls below grade (each assembly)
- Descriptive of assembly: EXISTING TO REMAIN
- U-Value of total assembly: ______
- R-Value of insulation: ______

Floors over unconditioned space (each assembly)
- Descriptive of assembly: EXISTING TO REMAIN
- U-Value of total assembly: ______
- R-Value of insulation: ______

Floors slab on grade
- Descriptive of assembly: EXISTING TO REMAIN
- U-Value of total assembly: ______
- R-Value of insulation: ______
- Horizontal/vertical requirement: ______
- Slab Heated: ______

STRUCTURAL DESIGN

EXISTING NO CHANGE

DESIGN LOADS: There is no structural scope in the project. The Design values are based on the Appendix B submitted for the 2021 renovation, which in turn are from the 2002 renovation.

Importance Factors: Snow (I_S) 1.0; Seismic (I_E) 1.0

Live Loads: Roof 20 psf; Mezzanine ______ psf; Floor 60 psf

Ground Snow Load: 15 psf

Wind Load: Ultimate Wind Speed 90 mph (ASCE-7); Exposure Category b

SEISMIC DESIGN CATEGORY ☐ A ☐ B ■ C ☐ D

Provide the following Seismic Design Parameters:
- Occupancy Category (Table 1604.5) ☐ I ☐ II ■ III ☐ IV
- Spectral Response Acceleration S_S 60 %g S_1 21.7 %g
- Site Classification (ASCE 7) ☐ A ☐ B ■ C ☐ D ☐ E ☐ F
- Data Source: ☐ Field Test ☐ Presumptive ■ Historical Data
- Basic Structural System: ☐ Bearing Wall ☐ Dual w/Special Moment Frame ■ Building Frame ☐ Dual w/Intermediate R/C or Special Steel ☐ Moment Frame ☐ Inverted Pendulum
- Analysis Procedure: ☐ Simplified ■ Equivalent Lateral Force ☐ Dynamic

Architectural, Mechanical, Components anchored? ■ Yes ☐ No

LATERAL DESIGN CONTROL: Earthquake ■ Wind ☐

SOIL BEARING CAPACITIES:
- Field Test (provide copy of test report) ______ psf
- Presumptive Bearing Capacity 3,000 psf
- Pile Size, Type and Capacity ______

ELECTRICAL SUMMARY

EXISTING NO CHANGE

MECHANICAL SUMMARY

SEE MECHANICAL SHEET M001 FOR MECHANICAL SUMMARY

MCKIM & CREED
Venture IV Building, Suite 500
1730 Varsity Drive
Raleigh, North Carolina 27606
Phone: (919) 233-8091, Fax: (919) 233-8031
www.mckimcreed.com

Western Carolina UNIVERSITY

NORTH CAROLINA PROFESSIONAL SEAL 045325 ENGINEER STEVEN M. THIGPEN 3-2-23

REV	REVISION DESCRIPTION	DATE

STILLWELL BUILDING HVAC CONTROLS REPLACEMENT WESTERN CAROLINA UNIVERSITY
SCO ID: 22-24466-01A
CODE: 42126 ITEM: 316

DATE	3/2/2023
M&C PROJ. #	07020-0003
DRAWN	JMT
DESIGNED	SMT
CHECKED	WTR
PROJ. MGR.	WTR

SCALE
HORIZONTAL: AS NOTED
VERTICAL: N/A

BID DOCUMENTS

BUILDING CODE SUMMARY

G001

2018 APPENDIX B

NC MECHANICAL SUMMARY

MECHANICAL SYSTEMS, SERVICE SYSTEMS AND EQUIPMENT

CLIMATE ZONE: 4A

THERMAL ZONE
- WINTER DRY BULB: 10° F
- SUMMER DRY BULB: 87° F

INTERIOR DESIGN CONDITIONS
- WINTER DRY BULB: 70° F
- SUMMER DRY BULB: 75° F
- RELATIVE HUMIDITY: 50%

BUILDING HEATING LOAD: EXISTING

BUILDING COOLING LOAD: EXISTING

MECHANICAL SPACING CONDITIONING SYSTEM

UNITARY
- DESCRIPTION OF UNIT: N/A
- HEATING EFFICIENCY: N/A
- COOLING EFFICIENCY: N/A
- HEAT OUTPUT OF UNIT: N/A
- COOLING OUTPUT OF UNIT: N/A

BOILER
- TOTAL BOILER OUTPUT. IF OVERSIZED, STATE REASON.: N/A

CHILLER
- TOTAL CHILLER CAPACITY. IF OVERSIZED, STATE REASON.: N/A

LIST EQUIPMENT EFFICIENCIES

MECHANICAL ABBREVIATIONS

AAV	AUTOMATIC AIR VENT	HX	HEAT EXCHANGER
ADJ	ADJUSTABLE OR ADJUSTMENT	IND	INDUCTION UNIT
AI	ANALOG IN	IWC	INCHES WATER COLUMN
AO	ANALOG OUT	JB	JUNCTION BOX
AFF	ABOVE FINISHED FLOOR	LAT	LEAVING AIR TEMPERATURE
AFG	ABOVE FINISHED GRADE	LPC	LOW PRESSURE CONDENSATE
AHU	AIR HANDLING UNIT	LPS	LOW PRESSURE STEAM
APD	AIRSIDE PRESSURE DROP	LWT	LEAVING WATER TEMPERATURE
BFF	BELOW FINISHED FLOOR	MAV	MANUAL AIR VENT
BLDG	BUILDING	MC	MECHANICAL CONTRACTOR
BMP	BOILER MANAGEMENT PANEL	MPC	MEDIUM PRESSURE CONDENSATE
CFM	CUBIC FEET PER MINUTE	MPS	MEDIUM PRESSURE STEAM
CMD	COMMAND	MTD	MONTH TO DATE
COND	CONDENSATE DRAINAGE	N/A	NOT AVAILABLE / NOT APPLICABLE
CV	CONSTANT VOLUME	NC	NORMALLY CLOSED
CWMU	COLD WATER MAKEUP UNIT	NIC	NOT IN CONTRACT
CHWR	CHILLED WATER RETURN	NO	NORMALLY OPEN
CHWS	CHILLED WATER SUPPLY	NTS	NOT TO SCALE
CWS	CONDENSER WATER SUPPLY	OCC	OCCUPANT OR OCCUPANCY
CWR	CONDENSER WATER RETURN	OA	OUTSIDE AIR
DI	DIGITAL IN	PC	PLUMBING CONTRACTOR
DO	DIGITAL OUT	PSI	POUNDS PER SQUARE INCH
DN	DOWN	RA	RETURN AIR
DWFO	DOUBLE WALL FLAT OVAL	RAG-X	RETURN AIR GRILLE - TYPE
EA	EXHAUST AIR	RTU	ROOF TOP UNIT
EAG-X	EXHAUST AIR GRILLE - TYPE	SA	SUPPLY AIR
EAT	ENTERING AIR TEMPERATURE	SAD-X	SUPPLY AIR DIFFUSER - TYPE
EC	ELECTRICAL CONTRACTOR	SC	SAFETY CIRCUIT
ESP	EXTERNAL STATIC PRESSURE	S/S	START/STOP
ETR	EXISTING TO REMAIN	STM COND	STEAM CONDENSATE RETURN
EWT	ENTERING WATER TEMPERATURE	TAB	TEST AND BALANCE
EX	EXISTING	TEMP	TEMPERATURE
FACP	FIRE ALARM CONTROL PANEL	TSP	TOTAL STATIC PRESSURE
FCU	FAN COIL UNIT	TYP	TYPICAL
FPM	FEET PER MINUTE	UH	UNIT HEATER
GC	GENERAL CONTRACTOR	VEL	VELOCITY
GPM	GALLONS PER MINUTE	VAV	VARIABLE AIR VOLUME
HWS	HEATING HOT WATER SUPPLY	VP	VIRTUAL POINT
HWR	HEATING HOT WATER RETURN	WPD	WATERSIDE PRESSURE DROP
HP	HORSEPOWER	XFMR	TRANSFORMER
HPC	HIGH PRESSURE CONDENSATE		
HPS	HIGH PRESSURE STEAM		

HAZARDOUS MATERIALS WARNING

HAZARDOUS MATERIALS, INCLUDING ASBESTOS CONTAINING MATERIALS, ARE EITHER NOT PRESENT OR WERE REMOVED PRIOR TO CONSTRUCTION, TO THE BEST OF THIS CONSULTANT'S KNOWLEDGE. THERE IS ALWAYS THE RISK OF REMAINING, UNDISCOVERED HAZARDOUS MATERIALS PRESENT IN THE CONSTRUCTION SITE HOWEVER. DURING THE COURSE OF THE PROJECT, SHOULD SUSPECT REGULATED MATERIALS BE LOCATED AND/OR IDENTIFIED, THE CONTRACTOR SHALL CEASE ALL WORK AND NOTIFY THE OWNER/DESIGNER/ENVIRONMENTAL CONSULTANT FOR CONFIRMATION AND TESTING IF NECESSARY.

CONTROLS LEGEND

Symbol	Description
○	ANALOG POINT
□	DIGITAL POINT
CO2	CARBON DIOXIDE SENSOR
POINT NAME	CONTROL POINT
CR	CONTROL RELAY
— - —	CONTROL WIRING
CS	CURRENT SWITCH
CT	CURRENT TRANSMITTER
DP	DIFFERENTIAL PRESSURE TRANSMITTER
E/P	ELECTRO-PNEUMATIC TRANSDUCER
$ ESS	EMERGENCY STOP SWITCH
ES	END SWITCH
ES	ENTHALPY SELECTOR
FS	FLOW SWITCH
FT	FLOW TRANSMITTER
FZ SC	FREEZESTAT
HT SC	HIGH TEMPERATURE SWITCH
HS	HUMIDITY SWITCH
HT	HUMIDITY TRANSMITTER
LS SC	LEVEL SWITCH
LM	LIGHT METER
M	MOTOR OPERATED DAMPER
MS	MOTOR STARTER
OS	OCCUPANCY SENSOR
$ OS	OVERRIDE SWITCH
O2	OXYGEN SENSOR
PS	PRESSURE SWITCH
PT	PRESSURE TRANSMITTER
SD	SMOKE DETECTOR
H	SPACE RELATIVE HUMIDITY TRANSMITTER
T	SPACE TEMPERATURE TRANSMITTER
TS	TIME SWITCH
TT	DUCT TEMPERATURE TRANSMITTER
VFD	VARIABLE FREQUENCY DRIVE
VP	VELOCITY PRESSURE TRANSMITTER
H20 SC	WATER DETECTION SWITCH

EQUIPMENT LEGEND

- VAV BOX
- FAN POWERED VAV BOX
- HYDRONIC COIL
- PRESSURE GAUGE
- THERMOMETER

DRAWING SYMBOLS

- FPV 1-1 — EQUIPMENT TAG
- # — DEMOLITION KEYED NOTE
- # — NEW WORK KEYED NOTE
- 2 — DETAIL NUMBER
- M1.1 — DRAWING NUMBER
- A — SECTION LETTER
- M1.1 — DRAWING NUMBER

MECHANICAL LEGEND

- LIMITS OF DEMOLITION
- POINT OF CONNECTION TO EXISTING
- T — ROOM TEMPERATURE SENSOR
- H — HUMIDITY TRANSMITTER
- OS — OCCUPANCY SENSOR
- CO2 — CARBON DIOXIDE SENSOR
- SUPPLY DIFFUSER
- RETURN GRILLE
- BEACON STROBE LIGHT FOR HVAC ALARM SYSTEMS.
- EXHAUST GRILLE
- J — JUNCTION BOX
- $ ESS — EMERGENCY STOP SWITCH
- VERTICAL FIRE DAMPER
- HORIZONTAL FIRE DAMPER
- COMBINATION FIRE/SMOKE DAMPER
- VOLUME DAMPER
- 3 BOX — DIFFUSER/GRILLE TAG, CFM, SIZE
- 2 BOX — DIFFUSER/GRILLE TAG, SIZE
- AIRFLOW DIRECTION
- SUPPLY REGISTER OR GRILLE
- EXHAUST OR RETURN GRILLE
- 10x10 — RECTANGULAR DUCTWORK
- 8"Ø — ROUND DUCTWORK
- EXISTING DUCTWORK
- DUCTWORK TO BE DEMOLISHED
- FLEXIBLE DUCTWORK (INSULATED)
- DUCT ACCESS DOOR
- UP / DN — SUPPLY DUCT (UP & DOWN)
- UP / DN — EXHAUST DUCT (UP & DOWN)
- UP / DN — RETURN DUCT (UP & DOWN)
- COMBINATION FIRE SMOKE DAMPER (PNEUMATIC -▽ ELECTRIC -▼)
- M — MOTORIZED SMOKE DAMPER
- SOUND ATTENUATOR TAG - MARK (X)
- AIRFLOW MEASURING STATION TAG - MARK (X)
- SD — SMOKE DETECTOR
- EXISTING PIPING TO REMAIN
- PIPING TO BE DEMOLISHED
- ISOLATION VALVE
- OR — GATE VALVE
- OR — GLOBE VALVE
- GATE VALVE WITH 3/4" HOSE ADAPTER
- OR — CHECK VALVE
- OR — BUTTERFLY VALVE
- OR — BALL VALVE
- OR — BALANCING VALVE
- RELIEF VALVE
- OR — WYE STRAINER
- BOILER DRAIN VALVE
- PRESSURE REGULATING VALVE
- M — CONTROL VALVE (2-WAY)
- M — CONTROL VALVE (3-WAY)
- TEST PLUG (PRESSURE/TEMPERATURE)
- PIPING DOWN
- PIPING UP
- TEE UP
- TEE DOWN
- CAPPED PIPING
- OR — IN LINE TRIPLE DUTY VALVE
- AUTOMATIC AIR VENT
- MANUAL AIR VENT

GENERAL NOTES

1. THE DRAWINGS SHALL NOT BE SCALED FOR CONSTRUCTION PURPOSES. THE SCALE, WHEN INDICATED IS INTENDED FOR GENERAL REFERENCE ONLY.
2. THE PRIME CONTRACTOR SHALL MAKE A COMPLETE REVIEW OF THE PROJECT PLANS, SCHEDULES, AND DETAILS PRIOR TO INSTALLATION OF THE MECHANICAL SYSTEMS AND REVIEW ANY CONFLICTS WITH THE ENGINEER.
3. ALL WORK SHALL CONFORM TO ALL LOCAL, STATE, AND NATIONAL CODES. EQUIPMENT SHALL BE INSTALLED IN ACCORDANCE WITH MANUFACTURER'S WRITTEN RECOMMENDATIONS. ANY EQUIPMENT OR MATERIAL DEVIATIONS FROM THAT SPECIFIED OR DETAILED ON THIS DRAWING SHALL BE SUBJECT TO THE APPROVAL OF THE ARCHITECT/ENGINEER. ALL PROPOSED EQUIPMENT DEVIATIONS SUBMITTED SHALL BE SIMILAR BOTH IN QUALITY AND CAPACITY TO THAT EQUIPMENT SPECIFIED.
4. DESIGN IS BASED ON THE MANUFACTURER AND MODEL SCHEDULED OR THE FIRST MANUFACTURER LISTED IN THE DRAWINGS AND SPECIFICATIONS. CONTRACTOR SHALL BEAR ANY AND ALL COSTS FOR ALTERING ANY OTHER CONTRACT OR SUB-CONTRACT RESULTING FROM THE USE OF ANY MANUFACTURER OR MODEL OTHER THAN THE DESIGN BASIS INCLUDING LISTED EQUALS.
5. PRIOR TO CONSTRUCTION, FABRICATING DUCTWORK, ORDERING EQUIPMENT, ETC., THE CONTRACTOR SHALL FIELD VERIFY SPACE LIMITATIONS AT THE JOB SITE AND COORDINATE WITH OTHER TRADES.
6. ALL MATERIALS, EQUIPMENT AND PRODUCTS INCORPORATED IN THE WORK UNDER THE CONTRACT SHALL BE NEW, OF A SUITABLE GRADE FOR THE PURPOSES INTENDED, AND TO THE EXTENT POSSIBLE, STANDARD PRODUCTS OF THE VARIOUS MANUFACTURES EXCEPT WHERE SPECIAL CONSTRUCTION OR PERFORMANCE FEATURES ARE CALLED FOR. THEY SHALL BE INSTALLED IN ACCORDANCE WITH THE MANUFACTURER'S REQUIREMENTS.
7. ALL MATERIALS AND EQUIPMENT SHALL BE NEW UNLESS OTHERWISE NOTED AND SHALL BE FURNISHED AND INSTALLED IN ACCORDANCE WITH THE MANUFACTURER'S REQUIREMENTS.
8. THE PRIME CONTRACTOR IS RESPONSIBLE FOR ANY DAMAGE CAUSED BY THEIR ACTIONS. SUCH DAMAGE SHALL BE RETURNED TO ORIGINAL NORMAL WORKING CONDITION, SUBJECT TO ACCEPTANCE OF THE OWNER AND ENGINEER, WITHOUT EXTRA COST TO THE OWNER.
9. THE PRIME CONTRACTOR SHALL KEEP THEIR WORK SITE AND ALL ACCESS POINTS OF THE BUILDING FREE OF RUBBISH AND WASTE MATERIAL. ALL ROOF OPENINGS IN THE BUILDING REQUIRED FOR THE MECHANICAL CONTRACT SHALL BE PROVIDED BY THE GENERAL CONTRACTOR. ALL FRAMING AROUND OPENINGS SHALL BE BY THE GENERAL CONTRACTOR. PRIME CONTRACTOR SHALL COORDINATE SIZE OF OPENINGS AND LOCATION OF OPENINGS WITH THE GENERAL CONTRACTOR. ALL ROOF CURBS AND ROOF SUPPORT RAILS FOR MECHANICAL EQUIPMENT INSTALLED ON THE ROOF SHALL BE FURNISHED BY THE PRIME CONTRACTOR AND INSTALLED BY THE GENERAL CONTRACTOR.
10. ALL OPENINGS IN WALLS AS REQUIRED BY THE MECHANICAL SYSTEM IN THE BUILDING SHALL BE PROVIDED BY THE PRIME CONTRACTOR.
11. REFER TO ARCHITECTURAL DRAWINGS, AS AVAILABLE, FOR LOCATIONS OF ALL RATED WALL AND FLOOR ASSEMBLIES. PROVIDE FIRE DAMPERS AND/OR U.L. LISTED ASSEMBLIES AND/OR SEALANTS PER DRAWINGS, SPECIFICATIONS, AND APPLICABLE CODES AT ALL PENETRATIONS.
12. THE PRIME CONTRACTOR SHALL FURNISH ACCESS DOORS FOR ALL GYPSUM BOARD CEILINGS AT VOLUME DAMPERS, EQUIPMENT, MOTOR OPERATED DAMPERS, FIRE DAMPERS, BALANCING DEVICES OR OTHER ITEMS REQUIRING BALANCING OR SERVICE. ACCESS DOORS SHALL BE INSTALLED BY THE GENERAL CONTRACTOR. SEE PLANS AND GENERAL CONSTRUCTION SPECIFICATIONS FOR ACCESS DOOR REQUIREMENTS.
13. ALL PIPING AND DUCTWORK (EXCEPT IN MECHANICAL ROOMS, BOILER ROOM, ETC.) SHALL BE CONCEALED UNLESS OTHERWISE SHOWN OR NOTED.
14. DO NOT INSTALL PIPING OR DUCTWORK OVER ANY ELECTRICAL SWITCHGEAR; SEE MECHANICAL DETAIL SHEET(S).
15. REFER TO SPECIFICATIONS FOR EQUIPMENT STARTUP PROCEDURES AND REQUIREMENTS.
16. THE PRIME CONTRACTOR SHALL OBTAIN AND PAY FOR ALL PERMITS, FEES, AND INSPECTIONS REQUIRED FOR HIS WORK. ALL MATERIALS REQUIRED FOR TESTING (E.G. - SMOKE GENERATORS) SHALL BE PROVIDED BY THE CONTRACTOR AT NO ADDITIONAL COST TO THE PROJECT. IF A PROJECT FAILS AN INSPECTION, THE CONTRACTOR SHALL BE RESPONSIBLE FOR ANY AND ALL COSTS ASSOCIATED WITH THE RE-INSPECTION.
17. ANY EQUIPMENT OR MATERIAL DEVIATIONS FROM THAT SPECIFIED OR DETAILED ON THIS DRAWING SHALL BE SUBJECT TO THE APPROVAL OF THE ARCHITECT/ENGINEER. ALL PROPOSED EQUIPMENT DEVIATIONS SUBMITTED SHALL BE SIMILAR BOTH IN QUALITY AND CAPACITY TO THAT EQUIPMENT SPECIFIED.
18. ALL MECHANICAL EQUIPMENT SHALL BE LISTED AND LABELED BY APPROVED THIRD PARTY LISTING AGENT.
19. THE PRIME CONTRACTOR SHALL PROVIDE AND INSTALL THEIR OWN SUPPORT EQUIPMENT. SUPPORT ALL EQUIPMENT FROM STRUCTURAL MEMBERS, UNLESS NOTED OTHERWISE. LOCATIONS SHALL BE COORDINATED WITH ALL CONTRACTORS PRIOR TO INSTALLATION.
20. DUCTWORK AND PIPING LAYOUTS AND LOCATIONS ARE SCHEMATIC. DO NOT SCALE THESE DRAWINGS. EXACT ROUTING OF DUCTWORK AND PIPING MUST BE DETERMINED IN THE FIELD. ALL DIMENSIONS SHALL BE FIELD VERIFIED BY THE CONTRACTOR BY ACTUAL MEASUREMENT AND OBSERVATION BEFORE ORDERING OR FABRICATING ANY DUCTWORK, PIPING OR EQUIPMENT. ANY DISCREPANCIES BETWEEN THE REQUIREMENTS OF THE CONTRACT DOCUMENTS AND THE EXISTING CONDITIONS OR DIMENSIONS SHALL BE REPORTED TO THE ENGINEER BEFORE THE PERFORMANCE OF ANY WORK. FAILURE TO VERIFY AND REPORT SHALL CONSTITUTE THE CONTRACTOR'S ACCEPTANCE OF THE EXISTING CONDITIONS AS FIT FOR THE PROPER EXECUTION OF THEIR WORK.
21. DUCTWORK AND PIPING SHALL BE KEPT AS CLOSE AND HIGH AS POSSIBLE TO THE BUILDING WALLS, CEILING AND FLOOR AND ROOF STRUCTURE IN ORDER THAT THE MAXIMUM AMOUNT OF SPACE IS AVAILABLE. ADDITIONAL OFFSETS, FITTINGS, ETC. NOT SHOWN BUT REQUIRED TO MAINTAIN MAXIMUM CLEARANCE SHALL BE PROVIDED AT NO ADDITIONAL COST.
22. THE PRIME CONTRACTOR SHALL BE RESPONSIBLE FOR ALL PATCHING AND CLEANING ASSOCIATED WITH THIS PROJECT.

DUCTWORK

23. DUCT SIZES SHOWN ON PLANS ARE FREE AREA DIMENSIONS. CONTRACTOR SHALL INCREASE SIZES AS NECESSARY TO ACCOMMODATE LINING, IF SPECIFIED.
24. BEFORE FABRICATING OR INSTALLING DUCTWORK, COORDINATE DUCT LOCATIONS WITH THE ELECTRICAL CONTRACTOR'S PANELS, CONDUIT AND RECESSED LIGHT FIXTURES, PLUMBING PIPING, AND ALL STRUCTURAL MEMBERS. THESE DRAWINGS ARE DIAGRAMMATIC AND ARE NOT SHOP DRAWINGS. ALL OFFSETS AND TRANSITIONS REQUIRED FOR THIS PROJECT MAY NOT BE SHOWN ON THESE DRAWINGS; HOWEVER, THEY SHALL BE PROVIDED WITHOUT CHANGE TO THE BID CONTRACTS.
25. BEFORE FABRICATING OR INSTALLING DUCTWORK, COORDINATE FINAL LOCATION OF CEILING GRILLES, REGISTERS AND DIFFUSERS WITH REFLECTED CEILING PLANS AND ELECTRICAL LIGHTING PLANS.
26. ALL SURFACES SEEN THOUGH GRILLES AND DIFFUSERS SHALL BE PAINTED MATTE BLACK.
27. CONTRACTOR SHALL TAKE ALL NECESSARY PRECAUTIONS TO KEEP ACCESS TO THE VOLUME DAMPERS WITHIN THE LAY-IN CEILING OR EXPOSED AREAS.
28. PROVIDE FLEXIBLE CONNECTIONS TO ALL AIR MOVING EQUIPMENT UNLESS NOTED OTHERWISE.
29. INSTALL DIFFUSERS WITH 3-WAY OR 2-WAY THROW AS REQUIRED TO AVOID BLOWING DIRECTLY ON THERMOSTATS.
30. MC SHALL CONFIRM ALL CEILING TYPES, HARD OR LAY-IN, INCLUDING NARROW TEE AND REGULAR, PRIOR TO SUBMITTAL OF SHOP DRAWINGS TO ENGINEER. ANY AIR DEVICES REQUIRING REPLACEMENT DUE TO LACK OF MC'S CONFIRMATION SHALL BE PROVIDED AT NO ADDITIONAL COST TO THE OWNER.
31. ALL FIRE DAMPERS AND U.L. FIRE STOPS SHALL BE INSTALLED IN COMPLETE ACCORDANCE WITH MANUFACTURER'S U.L. LISTING AND INSTALLATION INSTRUCTIONS. REGARDLESS OF DUCT SIZE, FIRE DAMPERS SHALL BE MINIMUM 12"x12" OR 12"Ø IN SIZE. TRANSITION BEYOND ACCESS DOOR AS REQUIRED TO MATCH ACTUAL DUCT SIZE.

INSULATION

32. ANY INSULATION DAMAGED DURING THE PROJECT SHALL BE REPAIRED AND ALL VAPOR BARRIERS RESTORED.

BUILDING AUTOMATION SYSTEM (CONTROLS)

33. SOME VIRTUAL POINTS ARE SHOWN ON THE CONTROL POINTS LISTS. THESE POINTS ARE INTENDED TO SHOW MAJOR VIRTUAL POINTS BUT IS NOT AN ALL-ENCOMPASSING LIST. THE CONTRACTOR IS RESPONSIBLE FOR DETERMINING FINAL POINT COUNTS AND SHALL ENSURE THAT THE CONTROLLERS PROVIDED ARE CAPABLE OF HANDLING ANY ADDITIONAL VIRTUAL POINTS THAT MAY BE NEEDED TO PROVIDE A FULLY FUNCTIONAL SYSTEM.
34. MOTOR CONNECTIONS AT MOTOR TERMINALS SHALL NOT BE MADE UNTIL ROTATION, HORSEPOWER, PHASE RATINGS, AND RATINGS OF ANY REQUIRED THERMAL HEATERS HAVE BEEN VERIFIED AND APPROVED AS CORRECT FOR THE INSTALLATION BY THE MC.
35. INSTALL THERMOSTATS AT THE SAME HEIGHT AS THE LIGHT SWITCH WHERE INSTALLED ADJACENT AND NO HIGHER THAN PERMITTED BY ADA GUIDELINES. PROVIDE INSULATED PLATES BEHIND THERMOSTATS INSTALLED ON EXTERIOR WALLS. COORDINATE LOCATION OF WALL MOUNTED THERMOSTATS, TEMPERATURE SENSORS, WALL SWITCHES, ETC. WITH OTHER CONTRACTORS TO AVOID CONFLICTS WITH DRAWING BOARDS, ELECTRICAL DEVICES, TACK BOARDS, ETC. ALL WIRING TO WALL MOUNTED DEVICES SHALL BE CONCEALED IN WALL UNLESS NOTED OTHERWISE.

COORDINATION

36. ALL SHUTDOWNS SHALL BE COORDINATED AND APPROVED THROUGH THE OWNERS' REPRESENTATIVE AND WILL REQUIRE ADVANCE NOTICE OF ONE WEEK MINIMUM. THIS TIME/LENGTH MAY BE LONGER OR SHORTER FOR SOME SHUTDOWNS AND SHALL BE AT THE OWNER'S DISCRETION.

DEMOLITION

37. THESE DRAWINGS DEFINE THE BASIC AREA OF DEMOLITION AND ARE AS ACCURATE AS WAS POSSIBLE FROM SITE INVESTIGATIONS MADE DURING THE DESIGN PROCESS. NOT ALL EXISTING MATERIALS AND EQUIPMENT ARE SHOWN. ANY MECHANICAL MATERIALS AND EQUIPMENT THAT ARE NOT BEING USED AFTER THE RENOVATION SHALL BE REMOVED WHETHER SHOWN OR NOT. NO MATERIALS OR EQUIPMENT SHALL BE ABANDONED IN PLACE UNLESS OTHERWISE NOTED.
38. ANY EQUIPMENT FOUND TO BE NON-FUNCTIONING SHALL BE DOCUMENTED AND BROUGHT TO THE ATTENTION OF THE OWNER PRIOR TO COMMENCEMENT OF DEMOLITION. IF PROPER NOTIFICATION IS NOT PROVIDED THEN REPAIR OR REPLACEMENT OF THE EQUIPMENT SHALL BE MADE AT NO ADDITIONAL COST TO THE OWNER.
39. EXISTING FLOOR DRAINS SHOULD BE COVERED DURING DEMOLITION AND NEW WORK CONSTRUCTION.

McKIM & CREED
Venture IV Building, Suite 500
1730 Varsity Drive
Raleigh, North Carolina 27606
Phone: (919) 233-8091, Fax: (919) 233-8031
www.mckimcreed.com

Western Carolina UNIVERSITY

NORTH CAROLINA PROFESSIONAL ENGINEER SEAL 045325 STEVEN M. THIGPEN 3-2-23

REV	REVISION DESCRIPTION	DATE

STILLWELL BUILDING HVAC CONTROLS REPLACEMENT WESTERN CAROLINA UNIVERSITY

SCO ID: 22-24466-01A
CODE: 42126 ITEM: 316

DATE	3/2/2023
M&C PROJ. #	07020-0003
DRAWN	JMT
DESIGNED	WTR
CHECKED	WTR
PROJ. MGR.	WTR

SCALE
HORIZONTAL: AS NOTED
VERTICAL: N/A

BID DOCUMENTS

MECHANICAL GENERAL NOTES, LEGENDS, APPREVIATIONS, AND APPENDIX B SUMMARY

M001

I:\07020\0003\ENG\80-DRAWINGS\86-DESIGN\863-HVAC DESIGN\M001 LEAD SHEET.DWG 03/03/2023 15:55:25 BEN CARVER

SHEET NOTES

1. ALL LOCATIONS OF EQUIPMENT, PIPING, ETC. ARE APPROXIMATE BASED ON PREVIOUS DESIGN DOCUMENTS AND SITE OBSERVATIONS AND SHALL BE FIELD VERIFIED BY THE CONTRACTOR PRIOR TO COMMENCEMENT OF WORK, ANY DISCREPANCIES SHALL BE REPORTED TO THE DESIGNER FOR FURTHER DIRECTION.

DEMOLITION KEY NOTES

1. INDICATES EXISTING SUPPLY AIR VALVE (BY PHEONIX) TO BE REMOVED. REMOVE VALVE AND PORTION OF DUCTWORK FROM VALVE TO EXISTING REHEAT COIL, DESIGNATED TO REMAIN, AS REQUIRED TO ACCOMMODATE NEW VALVE INSTALLATION. SEE NEW WORK PLAN FOR DETAILS.
2. INDICATES EXISTING GENERAL EXHAUST AIR VALVE (BY PHEONIX) TO BE REMOVED. REMOVE VALVE AND PORTION OF DUCTWORK AS REQUIRED TO ACCOMMODATE NEW VALVE INSTALLATION. SEE NEW WORK PLAN FOR DETAIL.
3. INDICATES FUME HOOD EXHAUST AIR VALVE (BY PHEONIX) TO BE REMOVED. REMOVE VALVE AND PORTION OF DUCTWORK AS REQUIRED TO ACCOMMODATE NEW VALVE INSTALLATION. SEE NEW WORK PLAN FOR DETAILS.
4. INDICATES EXISTING FUME HOOD. REMOVE EXISTING FUME HOOD MONITOR COMPLETE IN PREPARATION FOR NEW CONTROL DEVICE. SEE NEW WORK PLAN FOR DETAILS.
5. DEMOLISH EXISTING THERMOSTAT AND DEMOLISH ALL ASSOCIATED WIRING BACK TO THE CONTROLLER.
6. MECHANICAL CONTRACTOR SHALL DE-COMMISSION EXISTING FUME HOOD BY LOCKING SASH IN CLOSED POSITION, DISCONNECT EXISTING EXHAUST DUCT ABOVE EXISTING FUME HOOD IN CEILING PLENUM AND CAP, DEMOLISH PORTION OF EXISTING EXHAUST DUCT AS SHOWN AND CAP. PATCH ALL WALL PENETRATIONS TO MATCH EXISTING WHERE DUCTWORK IS REMOVED.
7. DEMOLISH EXISTING FUME HOOD EXHAUST AIR VALVE AND TURN OVER TO OWNER.
8. ALTERNATE #2: DEMOLISH EXISTING SERIES FAN POWERED TERMINAL UNIT CONTROLLER. THE EXISTING PANEL ENCLOSURE MAY BE REUSED AS SPACE ALLOWS, BUT SHALL BE REPLACED WITH A NEW CONTROL ENCLOSURE AS REQUIRED TO INSTALL NEW CONTROLLERS WITH ADEQUATE CLEARANCE SPACE. SEE CONTROL SCHEMATICS FOR FURTHER INFORMATION ON CONTROLS REPLACEMENT FOR EACH PIECE OF EQUIPMENT. ALL EXISTING CONTROL DEVICES AND DEVICE WIRING SHALL BE REUSED UNLESS NOTED OTHERWISE.
9. ALTERNATE #2: DEMOLISH EXISTING THERMOSTAT FOR SERIES FAN POWERED TERMINAL UNIT AND DEMOLISH ALL ASSOCIATED WIRING BACK TO THE CONTROLLER.

FUME HOOD DECOMMISSIONING NOTE

1. ALL HOODS NOTED FOR DECOMMISSIONING SHALL HAVE.

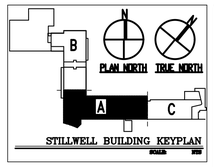

MCKIM&CREED
Venture IV Building, Suite 500
2700 Yonkers Road
Raleigh, North Carolina 27606
Phone: (919) 233-8091 , Fax: (919) 233-8031
www.mckimcreed.com

Western Carolina UNIVERSITY

REV	REVISION DESCRIPTION	DATE

STILLWELL BUILDING HVAC CONTROLS REPLACEMENT WESTERN CAROLINA UNIVERSITY
SCO ID: 22-24466-01A
CODE: 42126 ITEM: 316

DATE	3/2/2023
MKC PROJ. #	07020-0003
DRAWN	JMT
DESIGNED	WTR
CHECKED	WTR
PROJ. MGR	WTR

SCALE
HORIZONTAL: AS NOTED
VERTICAL: N/A

BID DOCUMENTS

FIRST FLOOR LAB WING AREA A DEMOLITION PLAN

M101

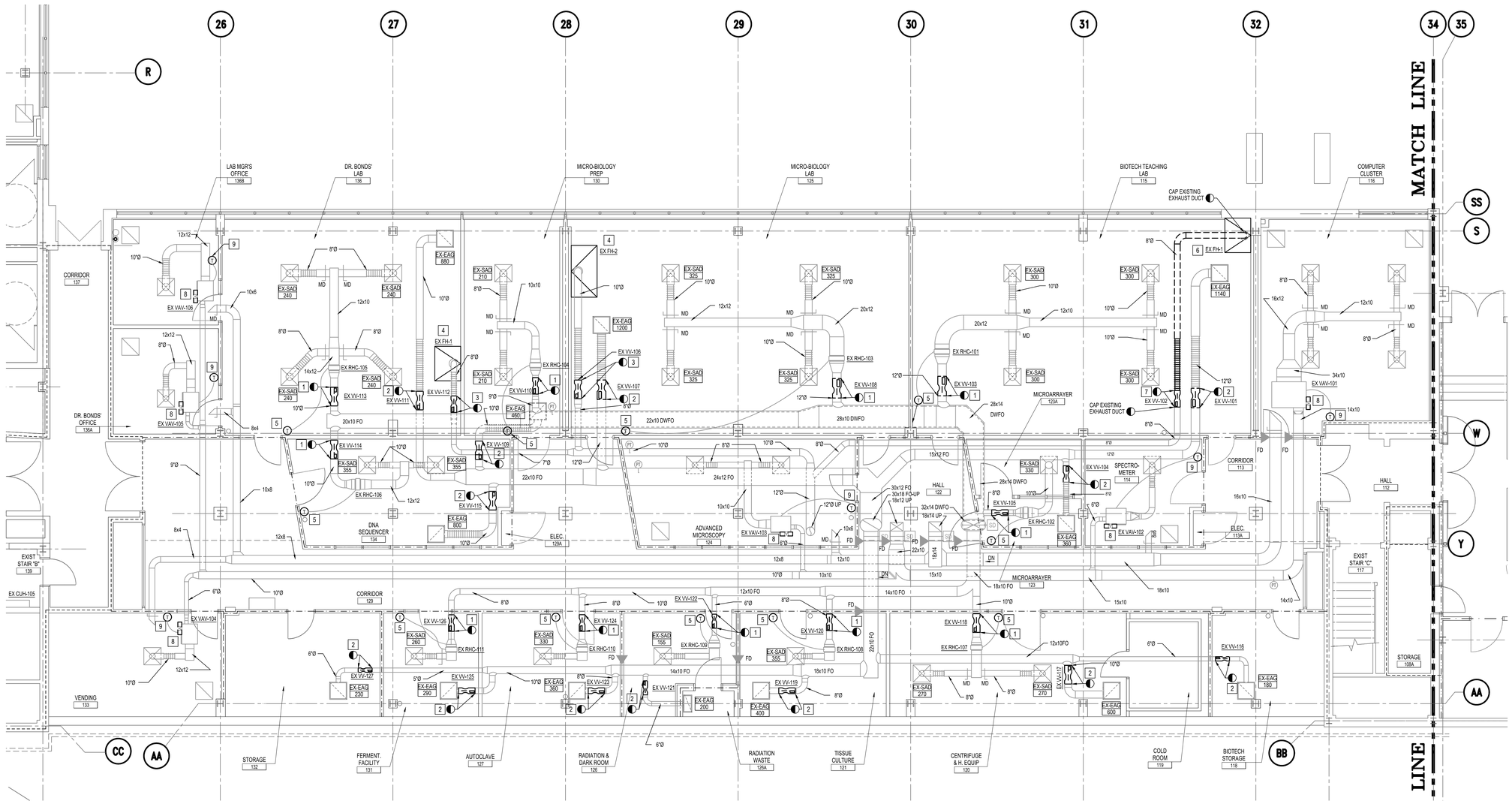

1 M101 **FIRST FLOOR LAB WING AREA A - DEMOLITION PLAN**
Scale: 3/16" = 1'-0"

FIRE RATED LEGEND
- ONE HOUR FIRE RATED PARTITION
- TWO HOUR FIRE RATED PARTITION
- THREE HOUR FIRE RATED WALL

3/16"=1'-0" 4' 3' 2' 1' 0 4' 8' 12'

I:\07020\0003\ENG\80-DRAWINGS\86-DESIGN\86HVAC\DESIGN\JMT01.DWG 03/03/2023 10:53:27 TEREN CARVER

SHEET NOTES

1. ALL LOCATIONS OF EQUIPMENT, PIPING, ETC. ARE APPROXIMATE BASED ON PREVIOUS DESIGN DOCUMENTS AND SITE OBSERVATIONS AND SHALL BE FIELD VERIFIED BY THE CONTRACTOR PRIOR TO COMMENCEMENT OF WORK, ANY DISCREPANCIES SHALL BE REPORTED TO THE DESIGNER FOR FURTHER DIRECTION.

DEMOLITION KEY NOTES

1. INDICATES EXISTING SUPPLY AIR VALVE (BY PHEONIX) TO BE REMOVED. REMOVE VALVE AND PORTION OF DUCTWORK FROM VALVE TO EXISTING REHEAT COIL, DESIGNATED TO REMAIN, AS REQUIRED TO ACCOMMODATE NEW VALVE INSTALLATION. SEE NEW WORK PLAN FOR DETAILS.
2. INDICATES EXISTING GENERAL EXHAUST AIR VALVE (BY PHEONIX) TO BE REMOVED. REMOVE VALVE AND PORTION OF DUCTWORK AS REQUIRED TO ACCOMMODATE NEW VALVE INSTALLATION. SEE NEW WORK PLAN FOR DETAIL.
3. INDICATES FUME HOOD EXHAUST AIR VALVE (BY PHEONIX) TO BE REMOVED. REMOVE VALVE AND PORTION OF DUCTWORK AS REQUIRED TO ACCOMMODATE NEW VALVE INSTALLATION. SEE NEW WORK PLAN FOR DETAILS.
4. INDICATES EXISTING FUME HOOD. REMOVE EXISTING FUME HOOD MONITOR COMPLETE IN PREPARATION FOR NEW CONTROL DEVICE. SEE NEW WORK PLAN FOR DETAILS.
5. DEMOLISH EXISTING THERMOSTAT AND DEMOLISH ALL ASSOCIATED WIRING BACK TO THE CONTROLLER.
6. ALTERNATE #2: DEMOLISH EXISTING SERIES FAN POWERED TERMINAL UNIT CONTROLLER. THE EXISTING PANEL ENCLOSURE MAY BE REUSED AS SPACE ALLOWS, BUT SHALL BE REPLACED WITH A NEW CONTROL ENCLOSURE AS REQUIRED TO INSTALL NEW CONTROLLERS WITH ADEQUATE CLEARANCE SPACE. SEE CONTROL SCHEMATICS FOR FURTHER INFORMATION ON CONTROLS REPLACEMENT FOR EACH PIECE OF EQUIPMENT. ALL EXISTING CONTROL DEVICES AND DEVICE WIRING SHALL BE REUSED UNLESS NOTED OTHERWISE.
7. ALTERNATE #2: DEMOLISH EXISTING THERMOSTAT FOR SERIES FAN POWERED TERMINAL UNIT AND DEMOLISH ALL ASSOCIATED WIRING BACK TO THE CONTROLLER.
8. ALTERNATE #3: DEMOLISH EXISTING CABINET UNIT HEATER CONTROLLER. THE EXISTING PANEL ENCLOSURE MAY BE REUSED AS SPACE ALLOWS, BUT SHALL BE REPLACED WITH A NEW CONTROL ENCLOSURE AS REQUIRED TO INSTALL NEW CONTROLLER WITH ADEQUATE CLEARANCE SPACE. SEE CONTROL SCHEMATICS FOR FURTHER INFORMATION ON CONTROLS REPLACEMENT FOR EACH PIECE OF EQUIPMENT. ALL EXISTING CONTROL DEVICES AND DEVICE WIRING SHALL BE REUSED UNLESS NOTED OTHERWISE.

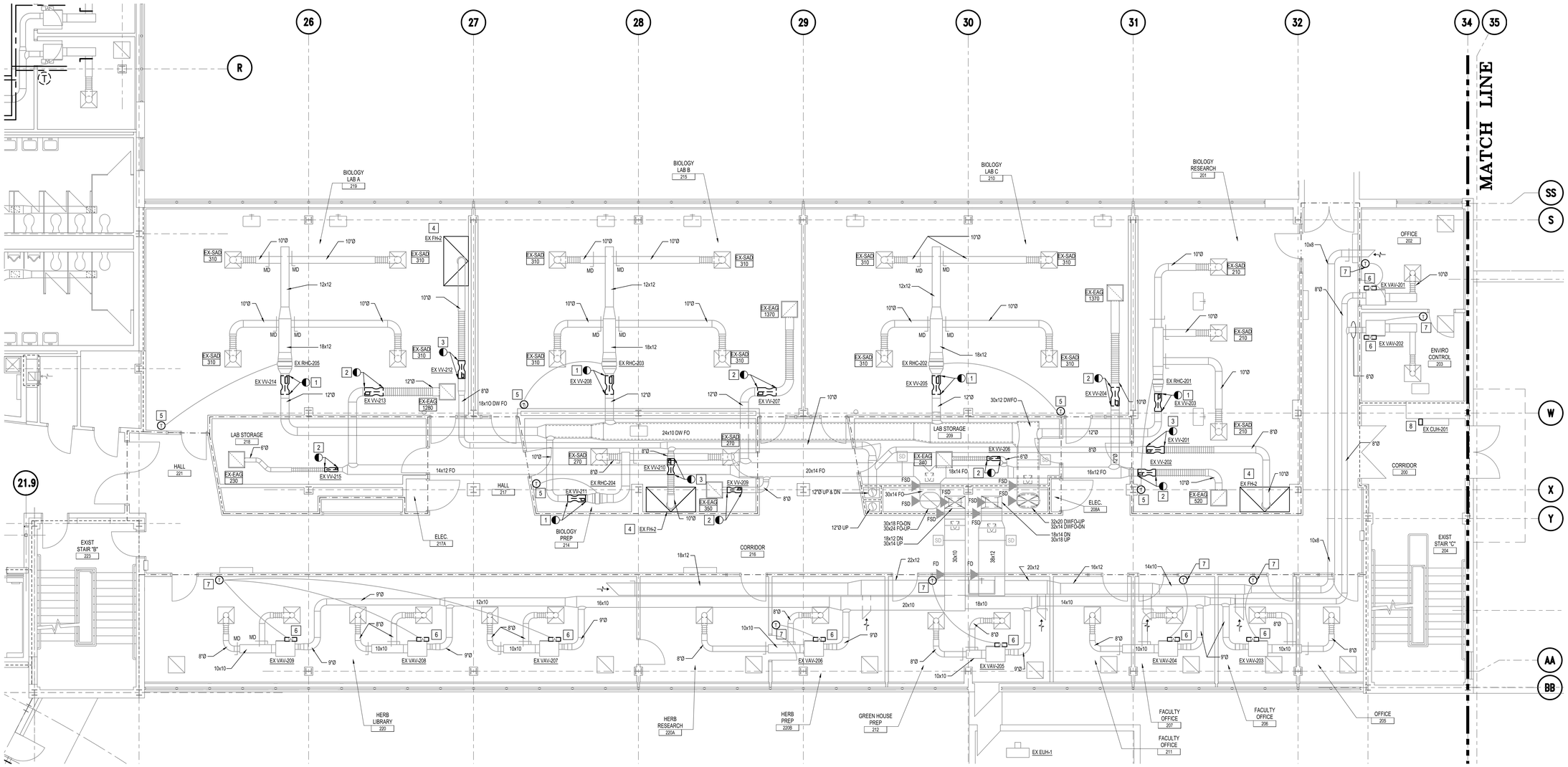

1 M102 SECOND FLOOR LAB WING AREA A - DEMOLITION PLAN

Scale: 3/16" = 1'-0"

FIRE RATED LEGEND

- ONE HOUR FIRE RATED PARTITION
- TWO HOUR FIRE RATED PARTITION
- THREE HOUR FIRE RATED WALL

3/16"=1'-0" 4' 3' 2' 1' 0 4' 8' 12'

McKIM&CREED
Venture IV Building, Suite 500
3737 Glenwood Avenue
Raleigh, North Carolina 27606
Phone: (919) 233-8091, Fax: (919) 233-8031
www.mckimcreed.com

Western Carolina University

NORTH CAROLINA PROFESSIONAL SEAL 045325 ENGINEER TERRY M. THURSTON 3-3-23

REV	REVISION DESCRIPTION	DATE

STILLWELL BUILDING HVAC CONTROLS REPLACEMENT WESTERN CAROLINA UNIVERSITY
SCO ID: 22-24466-01A
CODE: 42126 ITEM: 316

DATE	3/2/2023
M&C PROJ. #	07020-0003
DRAWN	JMT
DESIGNED	WTR
CHECKED	WTR
PROJ. MGR	WTR

SCALE
HORIZONTAL: AS NOTED
VERTICAL: N/A

BID DOCUMENTS

SECOND FLOOR LAB WING AREA A DEMOLITION PLAN

M102

I:\07020\0003\ENG\80-DRAWINGS\86-DESIGN\86HVAC DESIGN\M102.DWG 03/03/2023 10:53:29 JENNIFER CARVER

SHEET NOTES

1. ALL LOCATIONS OF EQUIPMENT, PIPING, ETC. ARE APPROXIMATE BASED ON PREVIOUS DESIGN DOCUMENTS AND SITE OBSERVATIONS AND SHALL BE FIELD VERIFIED BY THE CONTRACTOR PRIOR TO COMMENCEMENT OF WORK, ANY DISCREPANCIES SHALL BE REPORTED TO THE DESIGNER FOR FURTHER DIRECTION.

DEMOLITION KEY NOTES

1. INDICATES EXISTING SUPPLY AIR VALVE (BY PHEONIX) TO BE REMOVED. REMOVE VALVE AND PORTION OF DUCTWORK FROM VALVE TO EXISTING REHEAT COIL, DESIGNATED TO REMAIN, AS REQUIRED TO ACCOMMODATE NEW VALVE INSTALLATION. SEE NEW WORK PLAN FOR DETAILS.
2. INDICATES EXISTING GENERAL EXHAUST AIR VALVE (BY PHEONIX) TO BE REMOVED. REMOVE VALVE AND PORTION OF DUCTWORK AS REQUIRED TO ACCOMMODATE NEW VALVE INSTALLATION. SEE NEW WORK PLAN FOR DETAIL.
3. INDICATES FUME HOOD EXHAUST AIR VALVE (BY PHEONIX) TO BE REMOVED. REMOVE VALVE AND PORTION OF DUCTWORK AS REQUIRED TO ACCOMMODATE NEW VALVE INSTALLATION. SEE NEW WORK PLAN FOR DETAILS.
4. INDICATES EXISTING FUME HOOD. REMOVE EXISTING FUME HOOD MONITOR COMPLETE IN PREPARATION FOR NEW CONTROL DEVICE. SEE NEW WORK PLAN FOR DETAILS.
5. DEMOLISH EXISTING THERMOSTAT AND DEMOLISH ALL ASSOCIATED WIRING BACK TO THE CONTROLLER.
6. MECHANICAL CONTRACTOR SHALL DE-COMMISSION EXISTING FUME HOOD BY LOCKING SASH IN CLOSED POSITION, DISCONNECT EXISTING EXHAUST DUCT ABOVE EXISTING FUME HOOD IN CEILING PLENUM AND CAP, DEMOLISH PORTION OF EXISTING EXHAUST DUCT AS SHOWN AND CAP. PATCH ALL WALL PENETRATIONS TO MATCH EXISTING WHERE DUCTWORK IS REMOVED.
7. DEMOLISH EXISTING FUME HOOD EXHAUST AIR VALVE AND TURN OVER TO OWNER.
8. ALTERNATE #2: DEMOLISH EXISTING SERIES FAN POWERED TERMINAL UNIT CONTROLLER. THE EXISTING PANEL ENCLOSURE MAY BE REUSED AS SPACE ALLOWS, BUT SHALL BE REPLACED WITH A NEW CONTROL ENCLOSURE AS REQUIRED TO INSTALL NEW CONTROLLERS WITH ADEQUATE CLEARANCE SPACE. SEE CONTROL SCHEMATICS FOR FURTHER INFORMATION ON CONTROLS REPLACEMENT FOR EACH PIECE OF EQUIPMENT. ALL EXISTING CONTROL DEVICES AND DEVICE WIRING SHALL BE REUSED UNLESS NOTED OTHERWISE.
9. ALTERNATE #2: DEMOLISH EXISTING THERMOSTAT FOR SERIES FAN POWERED TERMINAL UNIT AND DEMOLISH ALL ASSOCIATED WIRING BACK TO THE CONTROLLER.
10. PATCH EXISTING RATED WALL WHERE DUCTWORK IS REMOVED TO MATCH EXISTING WALL CONSTRUCTION TO MAINTAIN THE EXISTING WALL RATING.

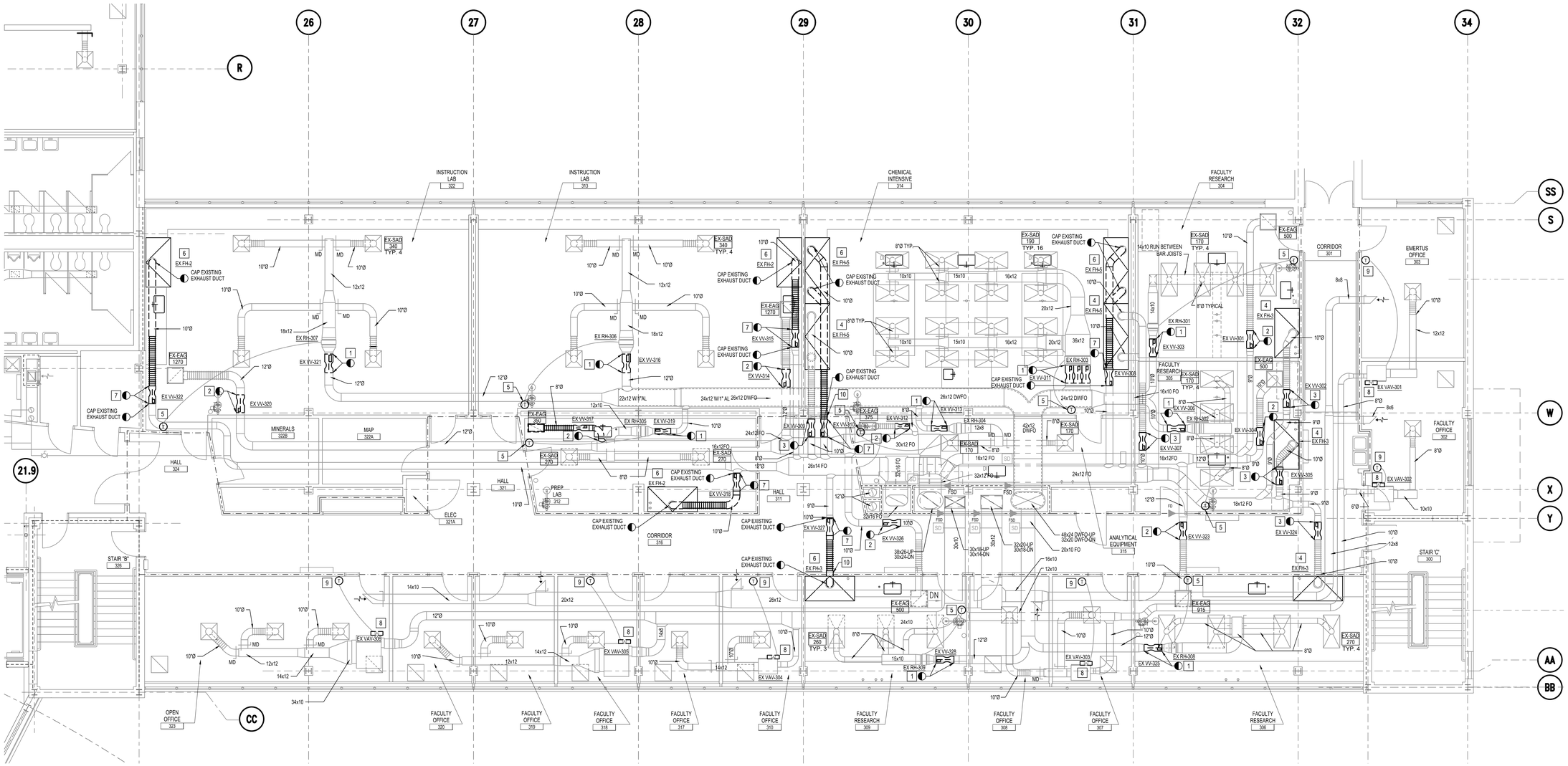

1 M103 THIRD FLOOR LAB WING AREA A - DEMOLITION PLAN

Scale: 3/16" = 1'-0"

FIRE RATED LEGEND

- ONE HOUR FIRE RATED PARTITION
- TWO HOUR FIRE RATED PARTITION
- THREE HOUR FIRE RATED WALL

3/16"=1'-0" 4' 3' 2' 1' 0 4' 8' 12'

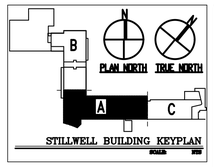

MCKIM&CREED
Venture IV Building, Suite 500
2700 Yonkers Road
Raleigh, North Carolina 27606
Phone: (919) 233-8091, Fax: (919) 233-8031
www.mckimcreed.com

Western Carolina University

NORTH CAROLINA PROFESSIONAL SEAL 045325 ENGINEER JEREN M. THIGPEN 3-3-23

REV	REVISION DESCRIPTION	DATE

STILLWELL BUILDING HVAC CONTROLS REPLACEMENT WESTERN CAROLINA UNIVERSITY
SCO ID: 22-24466-01A
CODE: 42126 ITEM: 316

DATE	3/2/2023
M&C PROJ. #	07020-0003
DRAWN	JMT
DESIGNED	WTR
CHECKED	WTR
PROJ. MGR	WTR

SCALE
HORIZONTAL: AS NOTED
VERTICAL: N/A

BID DOCUMENTS

THIRD FLOOR LAB WING AREA A DEMOLITION PLAN

M103

SHEET NOTES

1. ALL LOCATIONS OF EQUIPMENT, PIPING, ETC. ARE APPROXIMATE BASED ON PREVIOUS DESIGN DOCUMENTS AND SITE OBSERVATIONS AND SHALL BE FIELD VERIFIED BY THE CONTRACTOR PRIOR TO COMMENCEMENT OF WORK, ANY DISCREPANCIES SHALL BE REPORTED TO THE DESIGNER FOR FURTHER DIRECTION.

DEMOLITION KEY NOTES

1. INDICATES EXISTING EXISTING SUPPLY AIR VALVE (BY PHEONIX) TO BE REMOVED. REMOVE VALVE AND PORTION OF DUCTWORK FROM VALVE TO EXISTING REHEAT COIL, DESIGNATED TO REMAIN, AS REQUIRED TO ACCOMMODATE NEW VALVE INSTALLATION. SEE NEW WORK PLAN FOR DETAILS.
2. INDICATES EXISTING GENERAL EXHAUST AIR VALVE (BY PHEONIX) TO BE REMOVED. REMOVE VALVE AND PORTION OF DUCTWORK AS REQUIRED TO ACCOMMODATE NEW VALVE INSTALLATION. SEE NEW WORK PLAN FOR DETAIL.
3. INDICATES FUME HOOD EXHAUST AIR VALVE (BY PHEONIX) TO BE REMOVED. REMOVE VALVE AND PORTION OF DUCTWORK AS REQUIRED TO ACCOMMODATE NEW VALVE INSTALLATION. SEE NEW WORK PLAN FOR DETAILS.
4. INDICATES EXISTING FUME HOOD. REMOVE EXISTING FUME HOOD MONITOR COMPLETE IN PREPARATION FOR NEW CONTROL DEVICE. SEE NEW WORK PLAN FOR DETAILS.
5. DEMOLISH EXISTING THERMOSTAT AND DEMOLISH ALL ASSOCIATED WIRING BACK TO THE CONTROLLER.
6. MECHANICAL CONTRACTOR SHALL DE-COMMISSION EXISTING FUME HOOD BY LOCKING SASH IN CLOSED POSITION, DISCONNECT EXISTING EXHAUST DUCT ABOVE EXISTING FUME HOOD IN CEILING PLENUM AND CAP, DEMOLISH PORTION OF EXISTING EXHAUST DUCT AS SHOWN AND CAP. PATCH ALL WALL PENETRATIONS TO MATCH EXISTING WHERE DUCTWORK IS REMOVED.
7. DEMOLISH EXISTING FUME HOOD EXHAUST AIR VALVE AND TURN OVER TO OWNER.
8. DEMOLISH EXISTING FUME HOOD EXHAUST DUCT AS INDICATED, SEE NEW WORK FOR DETAILS.
9. ALTERNATE #2: DEMOLISH EXISTING SERIES FAN POWERED TERMINAL UNIT CONTROLLER. THE EXISTING PANEL ENCLOSURE MAY BE REUSED AS SPACE ALLOWS, BUT SHALL BE REPLACED WITH A NEW CONTROL ENCLOSURE AS REQUIRED TO INSTALL NEW CONTROLLERS WITH ADEQUATE CLEARANCE SPACE. SEE CONTROL SCHEMATICS FOR FURTHER INFORMATION ON CONTROLS REPLACEMENT FOR EACH PIECE OF EQUIPMENT. ALL EXISTING CONTROL DEVICES AND DEVICE WIRING SHALL BE REUSED UNLESS NOTED OTHERWISE.
10. ALTERNATE #2: DEMOLISH EXISTING THERMOSTAT FOR SERIES FAN POWERED TERMINAL UNIT AND DEMOLISH ALL ASSOCIATED WIRING BACK TO THE CONTROLLER.

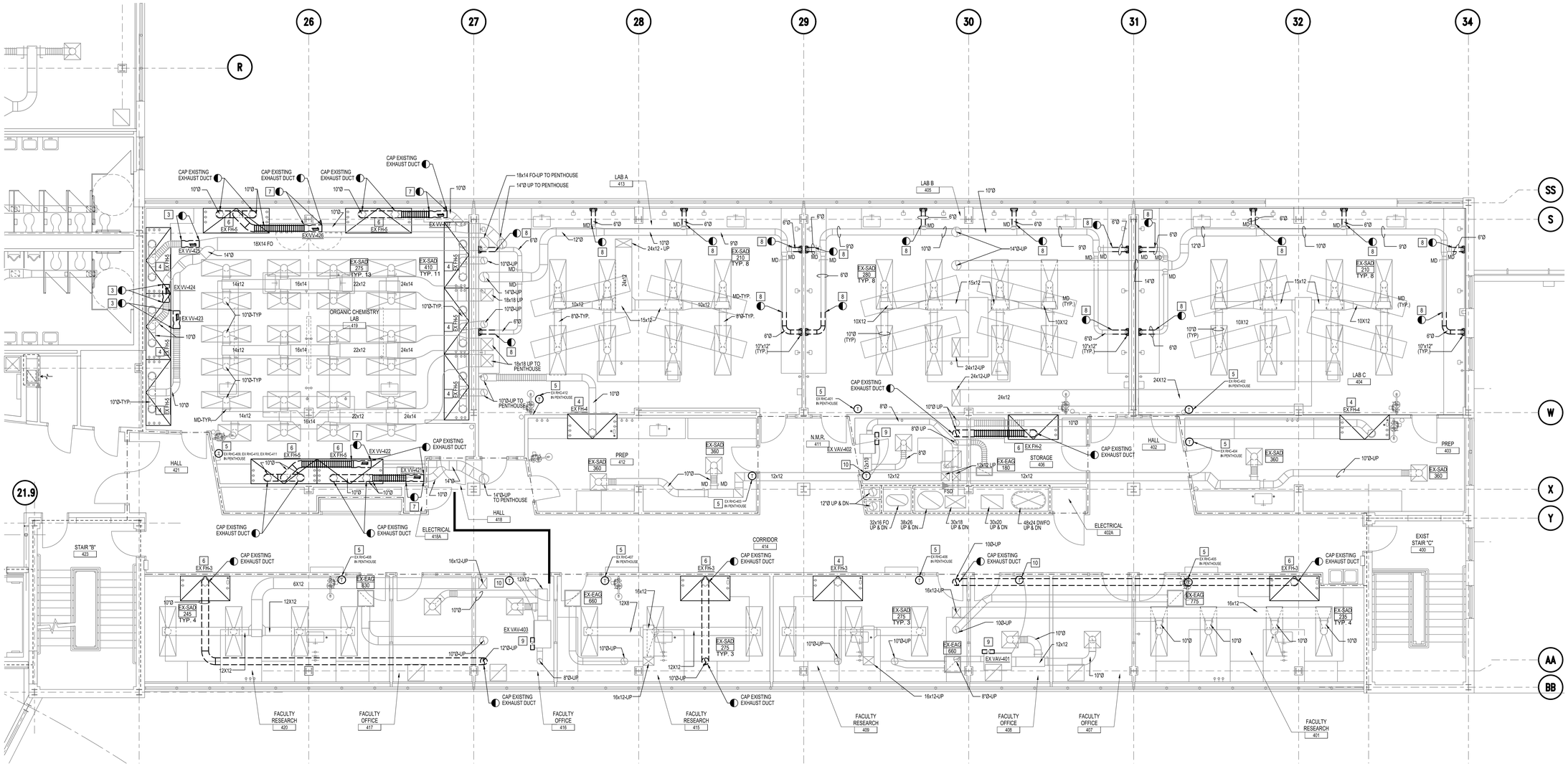

1 M104 FOURTH FLOOR LAB WING AREA A - DEMOLITION PLAN

Scale: 3/16" = 1'-0"

FIRE RATED LEGEND

- ONE HOUR FIRE RATED PARTITION
- TWO HOUR FIRE RATED PARTITION
- THREE HOUR FIRE RATED WALL

3/16"=1'-0" 4' 3' 2' 1' 0 4' 8' 12'

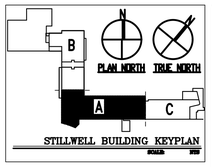

MCKIM&CREED
Venture IV Building, Suite 500
2700 Yonkers Road
Raleigh, North Carolina 27606
Phone: (919) 233-8091, Fax: (919) 233-8031
www.mckimcreed.com

Western Carolina University

NORTH CAROLINA PROFESSIONAL ENGINEER SEAL 045325 ENGINEER TIMOTHY M. THURSTON 3-1-23

REV	REVISION DESCRIPTION	DATE

STILLWELL BUILDING HVAC CONTROLS REPLACEMENT WESTERN CAROLINA UNIVERSITY

SCO ID: 22-24466-01A
CODE: 42126 ITEM: 316

DATE	3/2/2023
M&C PROJ. #	07020-0003
DRAWN	JMT
DESIGNED	WTR
CHECKED	WTR
PROJ. MGR	WTR

SCALE
HORIZONTAL: AS NOTED
VERTICAL: N/A

BID DOCUMENTS

FOURTH FLOOR LAB WING AREA A DEMOLITION PLAN

M104

I:\07020\0003\ENG\80-DRAWINGS\86-HVAC DESIGN\M104.DWG 03/03/2023 10:53:33 JENNIE CARVER

SHEET NOTES

1. ALL LOCATIONS OF EQUIPMENT, PIPING, ETC. ARE APPROXIMATE BASED ON PREVIOUS DESIGN DOCUMENTS AND SITE OBSERVATIONS AND SHALL BE FIELD VERIFIED BY THE CONTRACTOR PRIOR TO COMMENCEMENT OF WORK, ANY DISCREPANCIES SHALL BE REPORTED TO THE DESIGNER FOR FURTHER DIRECTION.

DEMOLITION KEY NOTES

1. INDICATES EXISTING EXISTING SUPPLY AIR VALVE (BY PHEONIX) TO BE REMOVED. REMOVE VALVE AND PORTION OF DUCTWORK FROM VALVE TO EXISTING REHEAT COIL, DESIGNATED TO REMAIN, AS REQUIRED TO ACCOMMODATE NEW VALVE INSTALLATION. SEE NEW WORK PLAN FOR DETAILS.
2. INDICATES EXISTING GENERAL EXHAUST AIR VALVE (BY PHEONIX) TO BE REMOVED. REMOVE VALVE AND PORTION OF DUCTWORK AS REQUIRED TO ACCOMMODATE NEW VALVE INSTALLATION. SEE NEW WORK PLAN FOR DETAIL.
3. INDICATES FUME HOOD EXHAUST AIR VALVE (BY PHEONIX) TO BE REMOVED. REMOVE VALVE AND PORTION OF DUCTWORK AS REQUIRED TO ACCOMMODATE NEW VALVE INSTALLATION. SEE NEW WORK PLAN FOR DETAILS.
4. ALTERNATE #3: DEMOLISH VENTILATION UNIT CONTROLLER. THE EXISTING PANEL ENCLOSURE MAY BE REUSED AS SPACE ALLOWS, BUT SHALL BE REPLACED WITH A NEW CONTROL ENCLOSURE AS REQUIRED TO INSTALL NEW CONTROLLER WITH ADEQUATE CLEARANCE SPACE. SEE CONTROL SCHEMATICS FOR FURTHER INFORMATION ON CONTROLS REPLACEMENT FOR EACH PIECE OF EQUIPMENT. ALL EXISTING CONTROL DEVICES AND DEVICE WIRING SHALL BE REUSED UNLESS NOTED OTHERWISE.
5. DEMOLISH EXISTING FUME HOOD EXHAUST AIR VALVE AND TURN OVER TO OWNER.
6. DEMOLISH EXISTING CONTROLLERS INSIDE THE EXISTING CONTROL PANEL ENCLOSURE. THE EXISTING PANEL ENCLOSURE MAY BE REUSED AS SPACE ALLOWS, BUT SHALL BE REPLACED WITH A NEW CONTROL ENCLOSURE AS REQUIRED TO INSTALL NEW CONTROLLERS WITH ADEQUATE CLEARANCE SPACE. SEE CONTROL SCHEMATICS FOR FURTHER INFORMATION ON CONTROLS REPLACEMENT FOR EACH PIECE OF EQUIPMENT. ALL EXISTING CONTROL DEVICES AND DEVICE WIRING SHALL BE REUSED UNLESS NOTED OTHERWISE.
7. DEMOLISH EXISTING 24V CONTROL TRANSFORMERS INSIDE THE EXISTING PANEL ENCLOSURE. THE EXISTING PANEL ENCLOSURE MAY BE REUSED AS SPACE ALLOWS, BUT SHALL BE REPLACED WITH A NEW PANEL ENCLOSURE AS REQUIRED TO INSTALL NEW TRANSFORMERS WITH ADEQUATE CLEARANCE SPACE. ALL EXISTING WIRING SHALL BE REUSED WHERE POSSIBLE.

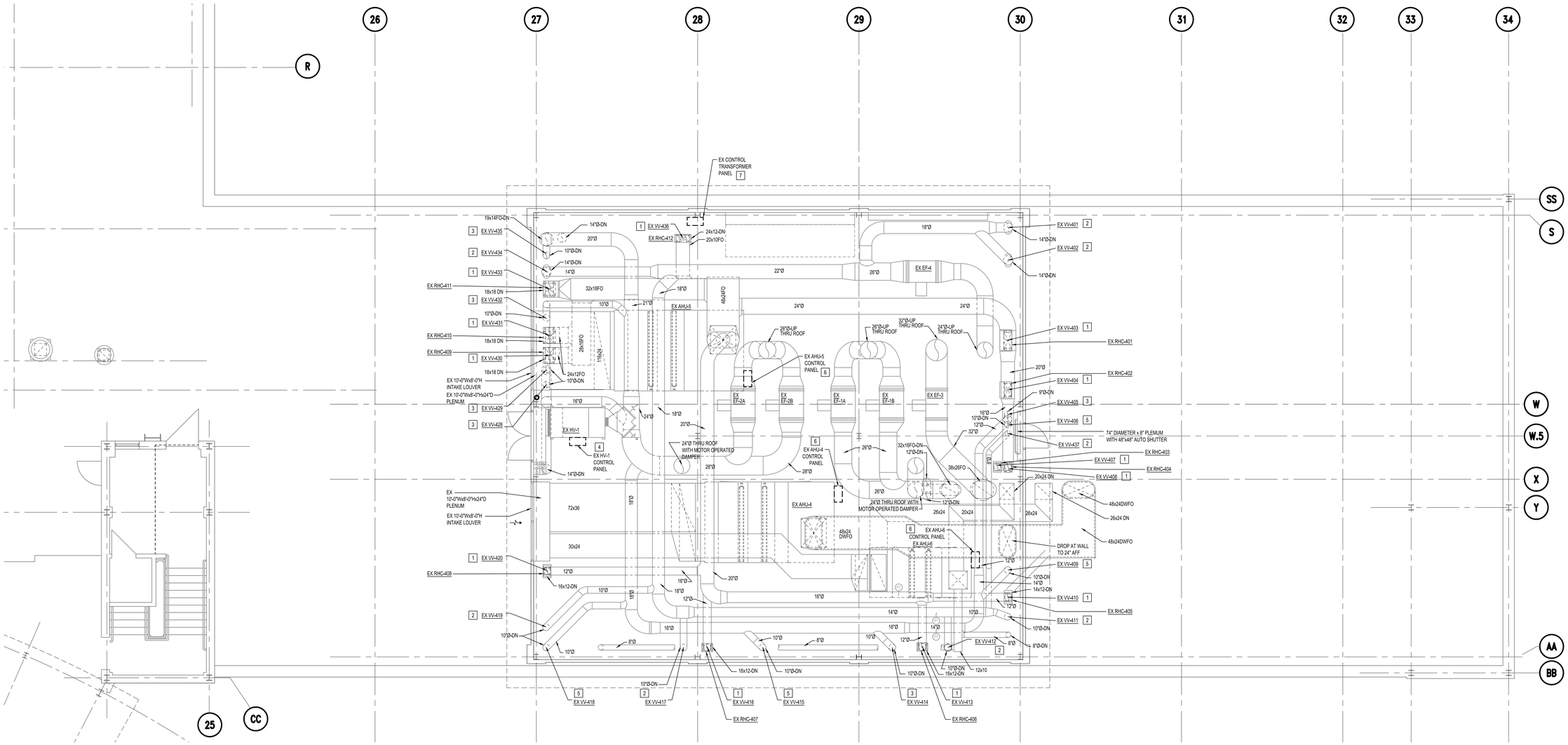

1 M105 **PENTHOUSE AREA A - DEMOLITION PLAN**
Scale: 3/16" = 1'-0"

FIRE RATED LEGEND

- ONE HOUR FIRE RATED PARTITION
- TWO HOUR FIRE RATED PARTITION
- THREE HOUR FIRE RATED WALL

3/16"=1'-0" 4' 3' 2' 1' 0 4' 8' 12'

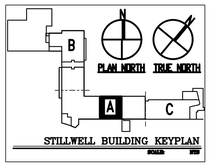

McKIM&CREED
Venture IV Building, Suite 500
2700 Yonkers Road
Raleigh, North Carolina 27606
Phone: (919) 233-8091, Fax: (919) 233-8031
www.mckimcreed.com

Western Carolina UNIVERSITY

NORTH CAROLINA PROFESSIONAL SEAL 045325 ENGINEER JEREN M. THIGPEN 3-3-23

REV	REVISION DESCRIPTION	DATE

STILLWELL BUILDING HVAC CONTROLS REPLACEMENT WESTERN CAROLINA UNIVERSITY
SCO ID: 22-24466-01A
CODE: 42126 ITEM: 316

DATE	3/2/2023
M&C PROJ. #	07020-0003
DRAWN	JMT
DESIGNED	WTR
CHECKED	WTR
PROJ. MGR	WTR

SCALE
HORIZONTAL: AS NOTED
VERTICAL: N/A

BID DOCUMENTS

PENTHOUSE AREA A DEMOLITION PLAN

M105

I:\07020\0003\ENG\80 - DRAWINGS\86 - DESIGN\BIM\HVAC\DESIGN\M105.DWG 03/03/2023 13:53:35 BENJ.CARVER

SHEET NOTES

1. ALL LOCATIONS OF EQUIPMENT, PIPING, ETC. ARE APPROXIMATE BASED ON PREVIOUS DESIGN DOCUMENTS AND SITE OBSERVATIONS AND SHALL BE FIELD VERIFIED BY THE CONTRACTOR PRIOR TO COMMENCEMENT OF WORK, ANY DISCREPANCIES SHALL BE REPORTED TO THE DESIGNER FOR FURTHER DIRECTION.

◇ NEW WORK KEY NOTES

1. PROVIDE NEW SUPPLY AIR VALVE. PROVIDE NEW PORTION OF DUCTWORK FROM VALVE TO EXISTING REHEAT COIL, DESIGNATED TO REMAIN, AS REQUIRED TO ACCOMMODATE NEW VALVE INSTALLATION. ANY DUCTWORK INSULATION REMOVED TO INSTALL THE NEW SUPPLY VALVE SHALL BE REPAIRED/REPLACED.
2. PROVIDE NEW GENERAL EXHAUST AIR VALVE. PROVIDE NEW PORTION OF DUCTWORK AS REQUIRED TO ACCOMMODATE NEW VALVE INSTALLATION.
3. PROVIDE NEW FUME HOOD EXHAUST AIR VALVE. PROVIDE NEW PORTION OF DUCTWORK AS REQUIRED TO ACCOMMODATE NEW VALVE INSTALLATION.
4. INDICATES EXISTING FUME HOOD. PROVIDE NEW FUME HOOD MONITOR.
5. PROVIDE NEW THERMOSTAT AND NEW WIRING BACK TO THE ASSOCIATED CONTROLLER.
6. PROVIDE NEW LAB CONTROLLER, MOUNT 6" ABOVE LAY-IN CEILING AT ACCESSIBLE LOCATION. COORDINATE FINAL LOCATION WITH OWNER/ENGINEER PRIOR TO INSTALLATION. PROVIDE NEW CONTROL TRANSFORMER AT THE NEAREST 120V JUNCTION BOX LOCATION SHOWN AND PROVIDE NEW 24V WIRING TO THE NEW LAB CONTROLLER. CONTROLS CONTRACTOR SHALL INCLUDE A PROPOSED POWER RISER DIAGRAM IN THE CONTROLS SUBMITTAL, SHOWING POWER REQUIREMENTS FOR ALL NEW CONTROLLERS AND CONTROL DEVICES, FOR REVIEW BY THE ENGINEER TO ENSURE PROPOSED EQUIPMENT WILL NOT OVERLOAD THE EXISTING POWER CIRCUITS.
7. ALTERNATE #2: PROVIDE NEW SERIES FAN POWERED TERMINAL UNIT CONTROLLER. THE EXISTING PANEL ENCLOSURE MAY BE REUSED AS SPACE ALLOWS, BUT SHALL BE REPLACED WITH A NEW CONTROL ENCLOSURE AS REQUIRED TO INSTALL NEW CONTROLLER WITH ADEQUATE CLEARANCE SPACE. THE CONTROL TRANSFORMER AND 24V WIRING SHALL BE REPLACED AND THE EXISTING 120V WIRING SHALL BE REUSED AND RECONNECTED TO THE NEW CONTROL TRANSFORMER. SEE CONTROL SCHEMATICS FOR FURTHER INFORMATION ON CONTROLS REPLACEMENT FOR EACH PIECE OF EQUIPMENT. ALL EXISTING CONTROL DEVICES AND DEVICE WIRING SHALL BE REUSED UNLESS NOTED OTHERWISE.
8. ALTERNATE #2: PROVIDE NEW THERMOSTAT FOR SERIES FAN POWERED TERMINAL UNIT AND PROVIDE NEW WIRING BACK TO THE ASSOCIATED CONTROLLER.
9. EXISTING 120V ELECTRICAL JUNCTION BOX LOCATION ABOVE CEILING SHOWN FOR REFERENCE. ALL CONTROL TRANSFORMERS MOUNTED ABOVE CEILING NEAR THE ELECTRICAL JUNCTION BOX, WHICH SERVE THE EXISTING LAB AIR VALVES AND ASSOCIATED CONTROLS, SHALL BE REPLACED WITH NEW. RECONNECT EXISTING 120V WIRING TO NEW CONTROL TRANSFORMERS. ALL 24V WIRING TO THE LAB AIR VALVES SHALL BE REPLACED.

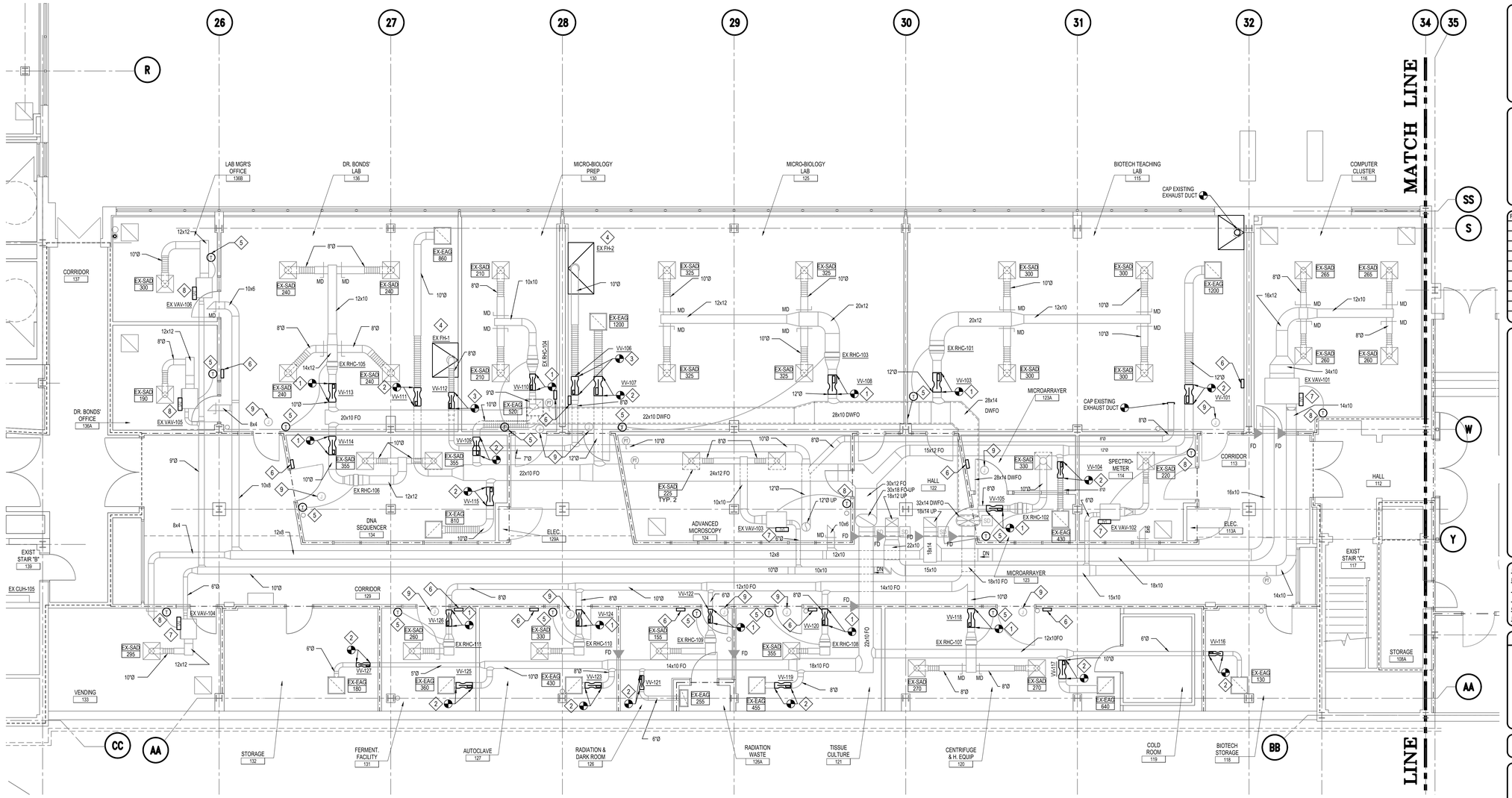

1 M201 **FIRST FLOOR LAB WING AREA A - NEW WORK PLAN**

Scale: 3/16" = 1'-0"

FIRE RATED LEGEND

- ONE HOUR FIRE RATED PARTITION
- TWO HOUR FIRE RATED PARTITION
- THREE HOUR FIRE RATED WALL

3/16"=1'-0" 4' 3' 2' 1' 0 4' 8' 12'

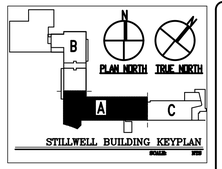

MCKIM&CREED
Venture IV Building, Suite 500
1730 Varsity Drive
Raleigh, North Carolina 27606
Phone: (919) 233-8091, Fax: (919) 233-8031
www.mckimcreed.com

Western Carolina UNIVERSITY

NORTH CAROLINA PROFESSIONAL SEAL 045325 ENGINEER TIEREN M. THURSTON 3-3-23

REV	REVISION DESCRIPTION	DATE

STILLWELL BUILDING HVAC CONTROLS REPLACEMENT WESTERN CAROLINA UNIVERSITY

SCO ID: 22-24466-01A
CODE: 42126 ITEM: 316

DATE	3/2/2023
MKC PROJ. #	07020-0003
DRAWN	JMT
DESIGNED	WTR
CHECKED	WTR
PROJ. MGR	WTR

SCALE
HORIZONTAL: AS NOTED
VERTICAL: N/A

BID DOCUMENTS

FIRST FLOOR LAB WING AREA A NEW WORK PLAN

M201

SHEET NOTES

1. ALL LOCATIONS OF EQUIPMENT, PIPING, ETC. ARE APPROXIMATE BASED ON PREVIOUS DESIGN DOCUMENTS AND SITE OBSERVATIONS AND SHALL BE FIELD VERIFIED BY THE CONTRACTOR PRIOR TO COMMENCEMENT OF WORK, ANY DISCREPANCIES SHALL BE REPORTED TO THE DESIGNER FOR FURTHER DIRECTION.

◇ NEW WORK KEY NOTES

1. PROVIDE NEW SUPPLY AIR VALVE. PROVIDE NEW PORTION OF DUCTWORK FROM VALVE TO EXISTING REHEAT COIL, DESIGNATED TO REMAIN, AS REQUIRED TO ACCOMMODATE NEW VALVE INSTALLATION. ANY DUCTWORK INSULATION REMOVED TO INSTALL THE NEW SUPPLY VALVE SHALL BE REPAIRED/REPLACED.
2. PROVIDE NEW GENERAL EXHAUST AIR VALVE. PROVIDE NEW PORTION OF DUCTWORK AS REQUIRED TO ACCOMMODATE NEW VALVE INSTALLATION.
3. PROVIDE NEW FUME HOOD EXHAUST AIR VALVE. PROVIDE NEW PORTION OF DUCTWORK AS REQUIRED TO ACCOMMODATE NEW VALVE INSTALLATION.
4. INDICATES EXISTING FUME HOOD. PROVIDE NEW FUME HOOD MONITOR.
5. PROVIDE NEW THERMOSTAT AND NEW WIRING BACK TO THE ASSOCIATED CONTROLLER.
6. PROVIDE NEW LAB CONTROLLER, MOUNT 6" ABOVE LAY-IN CEILING AT ACCESSIBLE LOCATION. COORDINATE FINAL LOCATION WITH OWNER/ENGINEER PRIOR TO INSTALLATION. PROVIDE NEW CONTROL TRANSFORMER AT THE NEAREST 120V JUNCTION BOX LOCATION SHOWN AND PROVIDE NEW 24V WIRING TO THE NEW LAB CONTROLLER. CONTROLS CONTRACTOR SHALL INCLUDE A PROPOSED POWER RISER DIAGRAM IN THE CONTROLS SUBMITTAL, SHOWING POWER REQUIREMENTS FOR ALL NEW CONTROLLERS AND CONTROL DEVICES, FOR REVIEW BY THE ENGINEER TO ENSURE PROPOSED EQUIPMENT WILL NOT OVERLOAD THE EXISTING POWER CIRCUITS.
7. ALTERNATE #2: PROVIDE NEW SERIES FAN POWERED TERMINAL UNIT CONTROLLER. THE EXISTING PANEL ENCLOSURE MAY BE REUSED AS SPACE ALLOWS, BUT SHALL BE REPLACED WITH A NEW CONTROL ENCLOSURE AS REQUIRED TO INSTALL NEW CONTROLLER WITH ADEQUATE CLEARANCE SPACE. THE CONTROL TRANSFORMER AND 24V WIRING SHALL BE REPLACED AND THE EXISTING 120V WIRING SHALL BE REUSED AND RECONNECTED TO THE NEW CONTROL TRANSFORMER. SEE CONTROL SCHEMATICS FOR FURTHER INFORMATION ON CONTROLS REPLACEMENT FOR EACH PIECE OF EQUIPMENT. ALL EXISTING CONTROL DEVICES AND DEVICE WIRING SHALL BE REUSED UNLESS NOTED OTHERWISE.
8. ALTERNATE #2: PROVIDE NEW THERMOSTAT FOR SERIES FAN POWERED TERMINAL UNIT AND PROVIDE NEW WIRING BACK TO THE ASSOCIATED CONTROLLER.
9. ALTERNATE #3: PROVIDE NEW CABINET UNIT HEATER CONTROLLER. THE EXISTING PANEL ENCLOSURE MAY BE REUSED AS SPACE ALLOWS, BUT SHALL BE REPLACED WITH A NEW CONTROL ENCLOSURE AS REQUIRED TO INSTALL NEW CONTROLLER WITH ADEQUATE CLEARANCE SPACE. THE CONTROL TRANSFORMER AND 24V WIRING SHALL BE REPLACED AND THE EXISTING 120V WIRING SHALL BE REUSED AND RECONNECTED TO THE NEW CONTROL TRANSFORMER. SEE CONTROL SCHEMATICS FOR FURTHER INFORMATION ON CONTROLS REPLACEMENT FOR EACH PIECE OF EQUIPMENT. ALL EXISTING CONTROL DEVICES AND DEVICE WIRING SHALL BE REUSED UNLESS NOTED OTHERWISE.
10. EXISTING 120V ELECTRICAL JUNCTION BOX LOCATION ABOVE CEILING SHOWN FOR REFERENCE. ALL CONTROL TRANSFORMERS MOUNTED ABOVE CEILING NEAR THE ELECTRICAL JUNCTION BOX, WHICH SERVE THE EXISTING LAB AIR VALVES AND ASSOCIATED CONTROLS, SHALL BE REPLACED WITH NEW. RECONNECT EXISTING 120V WIRING TO NEW CONTROL TRANSFORMERS. ALL 24V WIRING TO THE LAB AIR VALVES SHALL BE REPLACED.

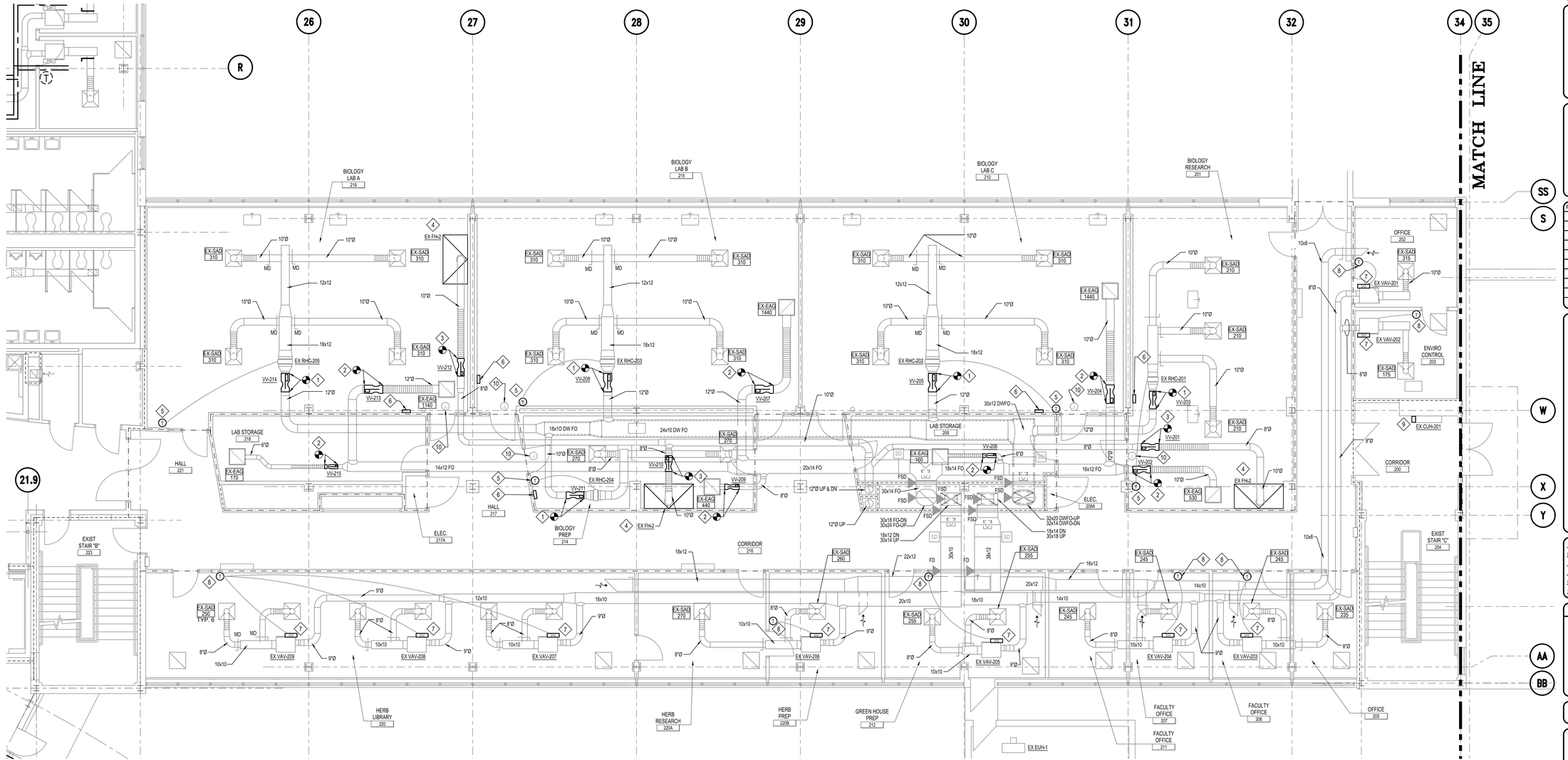

1 M202 **SECOND FLOOR LAB WING AREA A - NEW WORK PLAN**
Scale: 3/16" = 1'-0"

FIRE RATED LEGEND
- ONE HOUR FIRE RATED PARTITION
- TWO HOUR FIRE RATED PARTITION
- THREE HOUR FIRE RATED WALL

3/16"=1'-0" 4' 3' 2' 1' 0 4' 8' 12'

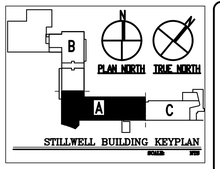

MCKIM&CREED
Venture IV Building, Suite 500
2700 Yonkers Road
Raleigh, North Carolina 27606
Phone: (919) 233-8091, Fax: (919) 233-8031
www.mckimcreed.com

Western Carolina UNIVERSITY

NORTH CAROLINA PROFESSIONAL SEAL 045325 ENGINEER TERRY M. THURSTON 3-3-23

REV	REVISION DESCRIPTION	DATE

STILLWELL BUILDING HVAC CONTROLS REPLACEMENT WESTERN CAROLINA UNIVERSITY
SCO ID: 22-24466-01A
CODE: 42126 ITEM: 316

DATE	3/2/2023
M&C PROJ. #	07020-0003
DRAWN	JMT
DESIGNED	WTR
CHECKED	WTR
PROJ. MGR	WTR

SCALE
HORIZONTAL: AS NOTED
VERTICAL: N/A

BID DOCUMENTS

SECOND FLOOR LAB WING AREA A NEW WORK PLAN

M202

SHEET NOTES

1. ALL LOCATIONS OF EQUIPMENT, PIPING, ETC. ARE APPROXIMATE BASED ON PREVIOUS DESIGN DOCUMENTS AND SITE OBSERVATIONS AND SHALL BE FIELD VERIFIED BY THE CONTRACTOR PRIOR TO COMMENCEMENT OF WORK, ANY DISCREPANCIES SHALL BE REPORTED TO THE DESIGNER FOR FURTHER DIRECTION.

◇ NEW WORK KEY NOTES

1. PROVIDE NEW SUPPLY AIR VALVE. PROVIDE NEW PORTION OF DUCTWORK FROM VALVE TO EXISTING REHEAT COIL, DESIGNATED TO REMAIN, AS REQUIRED TO ACCOMMODATE NEW VALVE INSTALLATION. ANY DUCTWORK INSULATION REMOVED TO INSTALL THE NEW SUPPLY VALVE SHALL BE REPAIRED/REPLACED.
2. PROVIDE NEW GENERAL EXHAUST AIR VALVE. PROVIDE NEW PORTION OF DUCTWORK AS REQUIRED TO ACCOMMODATE NEW VALVE INSTALLATION.
3. PROVIDE NEW FUME HOOD EXHAUST AIR VALVE. PROVIDE NEW PORTION OF DUCTWORK AS REQUIRED TO ACCOMMODATE NEW VALVE INSTALLATION.
4. INDICATES EXISTING FUME HOOD. PROVIDE NEW FUME HOOD MONITOR.
5. PROVIDE NEW THERMOSTAT AND NEW WIRING BACK TO THE ASSOCIATED CONTROLLER.
6. PROVIDE NEW LAB CONTROLLER, MOUNT 6" ABOVE LAY-IN CEILING AT ACCESSIBLE LOCATION. COORDINATE FINAL LOCATION WITH OWNER/ENGINEER PRIOR TO INSTALLATION. PROVIDE NEW CONTROL TRANSFORMER AT THE NEAREST 120V JUNCTION BOX LOCATION SHOWN AND PROVIDE NEW 24V WIRING TO THE NEW LAB CONTROLLER. CONTROLS CONTRACTOR SHALL INCLUDE A PROPOSED POWER RISER DIAGRAM IN THE CONTROLS SUBMITTAL, SHOWING POWER REQUIREMENTS FOR ALL NEW CONTROLLERS AND CONTROL DEVICES, FOR REVIEW BY THE ENGINEER TO ENSURE PROPOSED EQUIPMENT WILL NOT OVERLOAD THE EXISTING POWER CIRCUITS.
7. ALTERNATE #2: PROVIDE NEW SERIES FAN POWERED TERMINAL UNIT CONTROLLER. THE EXISTING PANEL ENCLOSURE MAY BE REUSED AS SPACE ALLOWS, BUT SHALL BE REPLACED WITH A NEW CONTROL ENCLOSURE AS REQUIRED TO INSTALL NEW CONTROLLER WITH ADEQUATE CLEARANCE SPACE. THE CONTROL TRANSFORMER AND 24V WIRING SHALL BE REPLACED AND THE EXISTING 120V WIRING SHALL BE REUSED AND RECONNECTED TO THE NEW CONTROL TRANSFORMER. SEE CONTROL SCHEMATICS FOR FURTHER INFORMATION ON CONTROLS REPLACEMENT FOR EACH PIECE OF EQUIPMENT. ALL EXISTING CONTROL DEVICES AND DEVICE WIRING SHALL BE REUSED UNLESS NOTED OTHERWISE.
8. ALTERNATE #2: PROVIDE NEW THERMOSTAT FOR SERIES FAN POWERED TERMINAL UNIT AND PROVIDE NEW WIRING BACK TO THE ASSOCIATED CONTROLLER.
9. PROVIDE NEW PORTION OF EXHAUST DUCT AND CONNECT TO NEW EXHAUST GRILLE.
10. EXISTING 120V ELECTRICAL JUNCTION BOX LOCATION ABOVE CEILING SHOWN FOR REFERENCE. ALL CONTROL TRANSFORMERS MOUNTED ABOVE CEILING NEAR THE ELECTRICAL JUNCTION BOX, WHICH SERVE THE EXISTING LAB AIR VALVES AND ASSOCIATED CONTROLS, SHALL BE REPLACED WITH NEW. RECONNECT EXISTING 120V WIRING TO NEW CONTROL TRANSFORMERS. ALL 24V WIRING TO THE LAB AIR VALVES SHALL BE REPLACED.

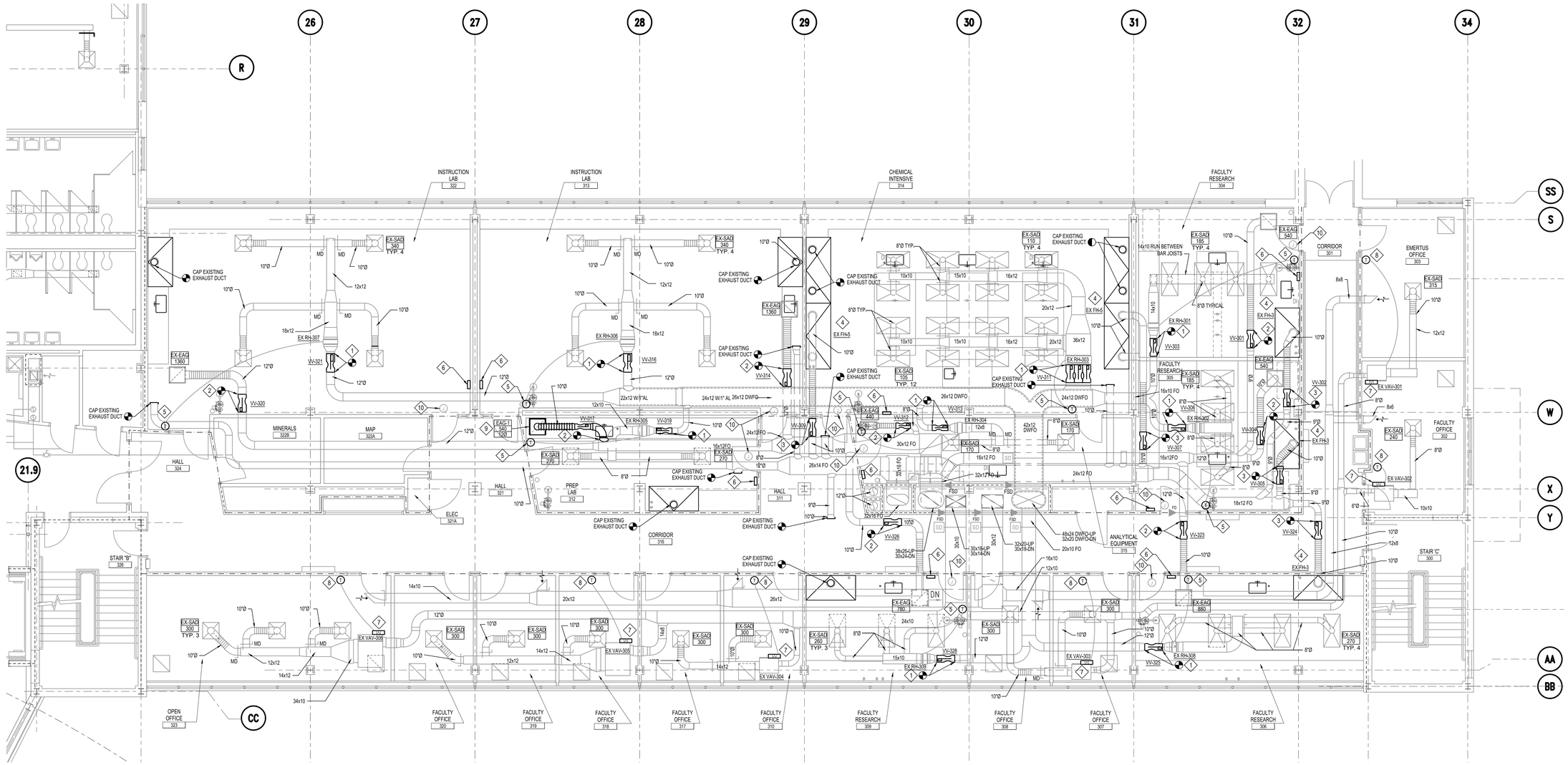

1 M203 **THIRD FLOOR LAB WING AREA A - NEW WORK PLAN**

Scale: 3/16" = 1'-0"

FIRE RATED LEGEND

- ONE HOUR FIRE RATED PARTITION
- TWO HOUR FIRE RATED PARTITION
- THREE HOUR FIRE RATED WALL

3/16"=1'-0" 4' 3' 2' 1' 0 4' 8' 12'

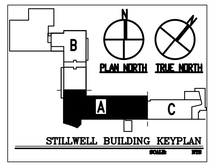

MCKIM&CREED
Venture IV Building, Suite 500
2700 Yonkers Road
Raleigh, North Carolina 27606
Phone: (919) 233-8091, Fax: (919) 233-8031
www.mckimcreed.com

Western Carolina University

NORTH CAROLINA PROFESSIONAL SEAL 045325 ENGINEER TIEREN M. THURSTON 3-3-23

REV	REVISION DESCRIPTION	DATE

STILLWELL BUILDING HVAC CONTROLS REPLACEMENT WESTERN CAROLINA UNIVERSITY

SCO ID: 22-24466-01A
CODE: 42126 ITEM: 316

DATE	3/2/2023
M&C PROJ. #	07020-0003
DRAWN	JMT
DESIGNED	WTR
CHECKED	WTR
PROJ. MGR	WTR

SCALE
HORIZONTAL: AS NOTED
VERTICAL: N/A

BID DOCUMENTS

THIRD FLOOR LAB WING AREA A NEW WORK PLAN

M203

SHEET NOTES

1. ALL LOCATIONS OF EQUIPMENT, PIPING, ETC. ARE APPROXIMATE BASED ON PREVIOUS DESIGN DOCUMENTS AND SITE OBSERVATIONS AND SHALL BE FIELD VERIFIED BY THE CONTRACTOR PRIOR TO COMMENCEMENT OF WORK, ANY DISCREPANCIES SHALL BE REPORTED TO THE DESIGNER FOR FURTHER DIRECTION.

◇ NEW WORK KEY NOTES

1. PROVIDE NEW SUPPLY AIR VALVE. PROVIDE NEW PORTION OF DUCTWORK FROM VALVE TO EXISTING REHEAT COIL, DESIGNATED TO REMAIN, AS REQUIRED TO ACCOMMODATE NEW VALVE INSTALLATION. ANY DUCTWORK INSULATION REMOVED TO INSTALL THE NEW SUPPLY VALVE SHALL BE REPAIRED/REPLACED.
2. PROVIDE NEW GENERAL EXHAUST AIR VALVE. PROVIDE NEW PORTION OF DUCTWORK AS REQUIRED TO ACCOMMODATE NEW VALVE INSTALLATION.
3. PROVIDE NEW FUME HOOD EXHAUST AIR VALVE. PROVIDE NEW PORTION OF DUCTWORK AS REQUIRED TO ACCOMMODATE NEW VALVE INSTALLATION.
4. INDICATES EXISTING FUME HOOD. PROVIDE NEW FUME HOOD MONITOR COMPLETE IN PREPARATION FOR NEW CONTROL DEVICE.
5. PROVIDE NEW THERMOSTAT AND NEW WIRING BACK TO THE ASSOCIATED CONTROLLER.
6. PROVIDE NEW PORTION OF EXHAUST DUCT AND CONNECT TO NEW EXHAUST GRILLE.
7. PROVIDE NEW LAB CONTROLLER, MOUNT 6" ABOVE LAY-IN CEILING AT ACCESSIBLE LOCATION. COORDINATE FINAL LOCATION WITH OWNER/ENGINEER PRIOR TO INSTALLATION. PROVIDE NEW CONTROL TRANSFORMER AT THE NEAREST 120V JUNCTION BOX LOCATION SHOWN AND PROVIDE NEW 24V WIRING TO THE NEW LAB CONTROLLER. CONTROLS CONTRACTOR SHALL INCLUDE A PROPOSED POWER RISER DIAGRAM IN THE CONTROLS SUBMITTAL, SHOWING POWER REQUIREMENTS FOR ALL NEW CONTROLLERS AND CONTROL DEVICES, FOR REVIEW BY THE ENGINEER TO ENSURE PROPOSED EQUIPMENT WILL NOT OVERLOAD THE EXISTING POWER CIRCUITS.
8. ALTERNATE #2: PROVIDE NEW SERIES FAN POWERED TERMINAL UNIT CONTROLLER. THE EXISTING PANEL ENCLOSURE MAY BE REUSED AS SPACE ALLOWS, BUT SHALL BE REPLACED WITH A NEW CONTROL ENCLOSURE AS REQUIRED TO INSTALL NEW CONTROLLER WITH ADEQUATE CLEARANCE SPACE. THE CONTROL TRANSFORMER AND 24V WIRING SHALL BE REPLACED AND THE EXISTING 120V WIRING SHALL BE REUSED AND RECONNECTED TO THE NEW CONTROL TRANSFORMER. SEE CONTROL SCHEMATICS FOR FURTHER INFORMATION ON CONTROLS REPLACEMENT FOR EACH PIECE OF EQUIPMENT. ALL EXISTING CONTROL DEVICES AND DEVICE WIRING SHALL BE REUSED UNLESS NOTED OTHERWISE.
9. ALTERNATE #2: PROVIDE NEW THERMOSTAT FOR SERIES FAN POWERED TERMINAL UNIT AND PROVIDE NEW WIRING BACK TO THE ASSOCIATED CONTROLLER.
10. EXISTING 120V ELECTRICAL JUNCTION BOX LOCATION ABOVE CEILING SHOWN FOR REFERENCE. ALL CONTROL TRANSFORMERS MOUNTED ABOVE CEILING NEAR THE ELECTRICAL JUNCTION BOX, WHICH SERVE THE EXISTING LAB AIR VALVES AND ASSOCIATED CONTROLS, SHALL BE REPLACED WITH NEW. RECONNECT EXISTING 120V WIRING TO NEW CONTROL TRANSFORMERS. ALL 24V WIRING TO THE LAB AIR VALVES SHALL BE REPLACED.
11. PROVIDE NEW TRANSFER DUCT WITH INTERNAL FLEXIBLE ELASTOMERIC INSULATION FOR SOUND DAMPENING. DIMENSIONS INDICATED ARE INSIDE CLEAR DIMENSIONS.

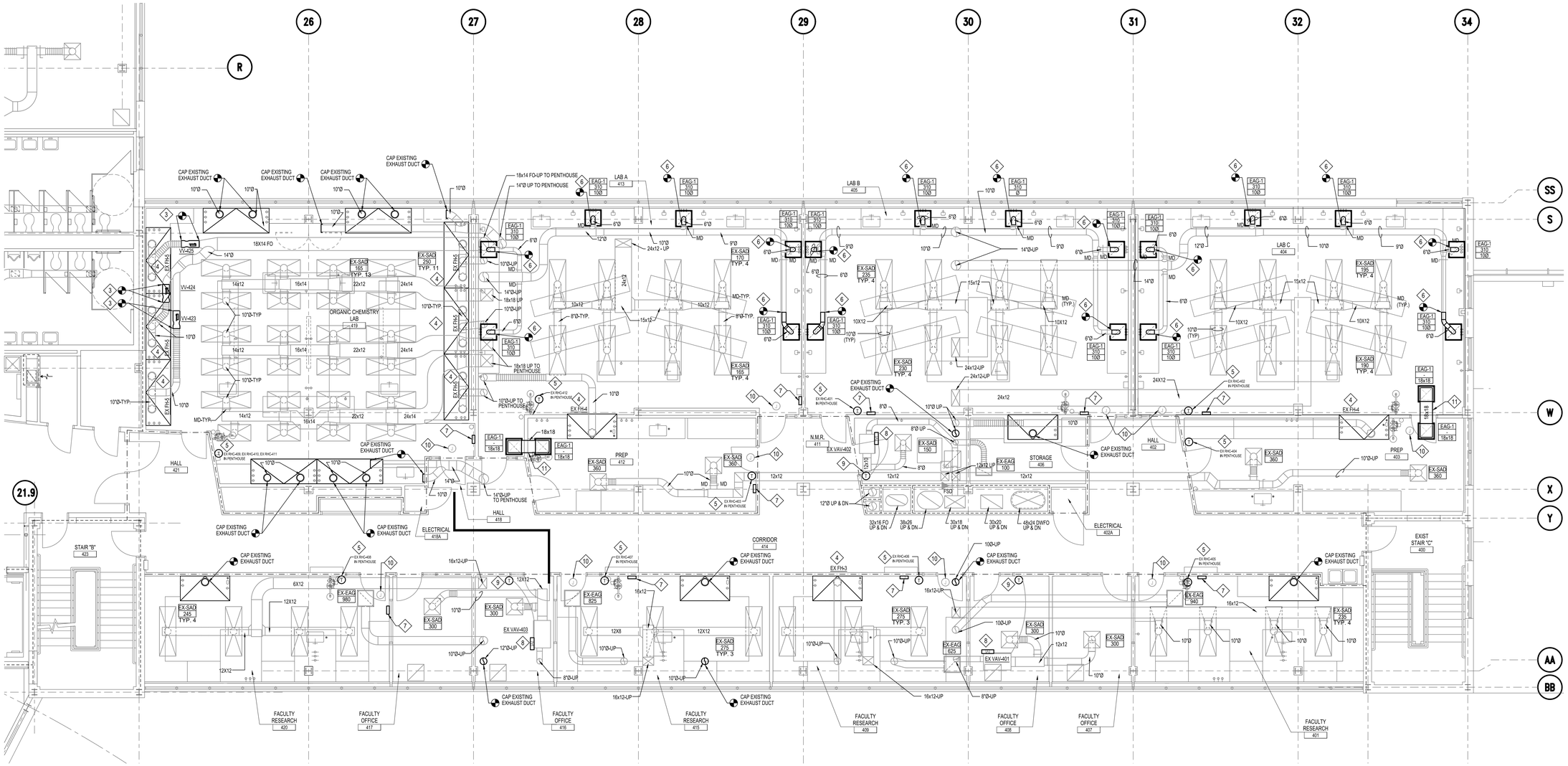

1 M204 **FOURTH FLOOR LAB WING AREA A - NEW WORK PLAN**
Scale: 3/16" = 1'-0"

FIRE RATED LEGEND
- ONE HOUR FIRE RATED PARTITION
- TWO HOUR FIRE RATED PARTITION
- THREE HOUR FIRE RATED WALL

3/16"=1'-0" 4' 3' 2' 1' 0 4' 8' 12'

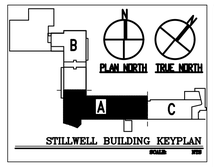

MCKIM&CREED
Venture IV Building, Suite 500
2700 Yonkers Road
Raleigh, North Carolina 27606
Phone: (919) 233-8091, Fax: (919) 233-8031
www.mckimcreed.com

Western Carolina University

NORTH CAROLINA PROFESSIONAL ENGINEER SEAL 045325 ENGINEER TERRY M. THURSTON 3-1-23

REV	REVISION DESCRIPTION	DATE

STILLWELL BUILDING HVAC CONTROLS REPLACEMENT WESTERN CAROLINA UNIVERSITY
SCO ID: 22-24466-01A
CODE: 42126 ITEM: 316

DATE	3/2/2023
M&C PROJ. #	07020-0003
DRAWN	JMT
DESIGNED	WTR
CHECKED	WTR
PROJ. MGR	WTR

SCALE
HORIZONTAL: AS NOTED
VERTICAL: N/A

BID DOCUMENTS

FOURTH FLOOR LAB WING AREA A NEW WORK PLAN

M204

I:\07020\0003\ENG\80-DRAWINGS\86-DESIGN\86HVAC\DESIGN\M204.DWG 03/03/2023 10:55:34 TERRI.CARVER

SHEET NOTES

1. ALL LOCATIONS OF EQUIPMENT, PIPING, ETC. ARE APPROXIMATE BASED ON PREVIOUS DESIGN DOCUMENTS AND SITE OBSERVATIONS AND SHALL BE FIELD VERIFIED BY THE CONTRACTOR PRIOR TO COMMENCEMENT OF WORK, ANY DISCREPANCIES SHALL BE REPORTED TO THE DESIGNER FOR FURTHER DIRECTION.
2. WIRING FOR LAB AIR VALVES LOCATED IN THE PENTHOUSE IS ROUTED DOWN TO THE 4TH FLOOR. SEE M204 FOR EXISTING ELECTRICAL JUNCTION BOX AND CONTROL TRANSFORMER LOCATIONS ABOVE THE 4TH FLOOR CEILING.

◇ NEW WORK KEY NOTES

1. PROVIDE NEW SUPPLY AIR VALVE. PROVIDE NEW PORTION OF DUCTWORK FROM VALVE TO EXISTING REHEAT COIL, DESIGNATED TO REMAIN, AS REQUIRED TO ACCOMMODATE NEW VALVE INSTALLATION. ANY DUCTWORK INSULATION REMOVED TO INSTALL THE NEW SUPPLY VALVE SHALL BE REPAIRED/REPLACED.
2. PROVIDE NEW GENERAL EXHAUST AIR VALVE. PROVIDE NEW PORTION OF DUCTWORK AS REQUIRED TO ACCOMMODATE NEW VALVE INSTALLATION.
3. PROVIDE NEW FUME HOOD EXHAUST AIR VALVE. PROVIDE NEW PORTION OF DUCTWORK AS REQUIRED TO ACCOMMODATE NEW VALVE INSTALLATION.
4. PROVIDE ALL NEW DDC CONTROLLERS. THE EXISTING PANEL ENCLOSURE MAY BE REUSED AS SPACE ALLOWS, BUT SHALL BE REPLACED WITH A NEW CONTROL ENCLOSURE AS REQUIRED TO INSTALL NEW CONTROLLERS WITH ADEQUATE CLEARANCE SPACE. ALL NEW ENCLOSURES SHALL BE UL LISTED AND LABELED FOR THE APPLICATION. SEE CONTROL SCHEMATICS FOR FURTHER INFORMATION ON CONTROLS REPLACEMENT FOR EACH PIECE OF EQUIPMENT. ALL EXISTING CONTROL DEVICES AND DEVICE WIRING SHALL BE REUSED UNLESS NOTED OTHERWISE.
5. PROVIDE ALL NEW 24V CONTROL TRANSFORMERS. THE EXISTING PANEL ENCLOSURE MAY BE REUSED AS SPACE ALLOWS, BUT SHALL BE REPLACED WITH A NEW PANEL ENCLOSURE AS REQUIRED TO INSTALL NEW TRANSFORMERS WITH ADEQUATE CLEARANCE SPACE. ALL NEW ENCLOSURES SHALL BE UL LISTED AND LABELED FOR THE APPLICATION. RECONNECT EXISTING 120V WIRING TO NEW CONTROL TRANSFORMERS. PROVIDE NEW 24V WIRING FROM THE NEW CONTROL TRANSFORMERS TO THE NEW ASSOCIATED CONTROLLERS IN THE PENTHOUSE.
6. ALTERNATE #3: PROVIDE NEW VENTILATION UNIT CONTROLLER. THE EXISTING PANEL ENCLOSURE MAY BE REUSED AS SPACE ALLOWS, BUT SHALL BE REPLACED WITH A NEW CONTROL ENCLOSURE AS REQUIRED TO INSTALL NEW CONTROLLER WITH ADEQUATE CLEARANCE SPACE. SEE CONTROL SCHEMATICS FOR FURTHER INFORMATION ON CONTROLS REPLACEMENT FOR EACH PIECE OF EQUIPMENT. ALL EXISTING CONTROL DEVICES AND DEVICE WIRING SHALL BE REUSED UNLESS NOTED OTHERWISE.

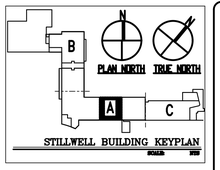

MCKIM&CREED
Venture IV Building, Suite 500
12701 Weston Parkway
Raleigh, North Carolina 27606
Phone: (919) 233-8091, Fax: (919) 233-8031
www.mckimcreed.com

Western Carolina UNIVERSITY

REV.	REVISION DESCRIPTION	DATE

STILLWELL BUILDING
HVAC CONTROLS
REPLACEMENT
WESTERN CAROLINA UNIVERSITY
SCO ID: 22-24466-01A
CODE: 42126 ITEM: 316

DATE	3/2/2023
M&C PROJ. #	07020-0003
DRAWN	JMT
DESIGNED	WTR
CHECKED	WTR
PROJ. MGR	WTR

SCALE
HORIZONTAL:
AS NOTED

VERTICAL:
N/A

BID DOCUMENTS

PENTHOUSE
AREA A
NEW WORK PLAN

M205

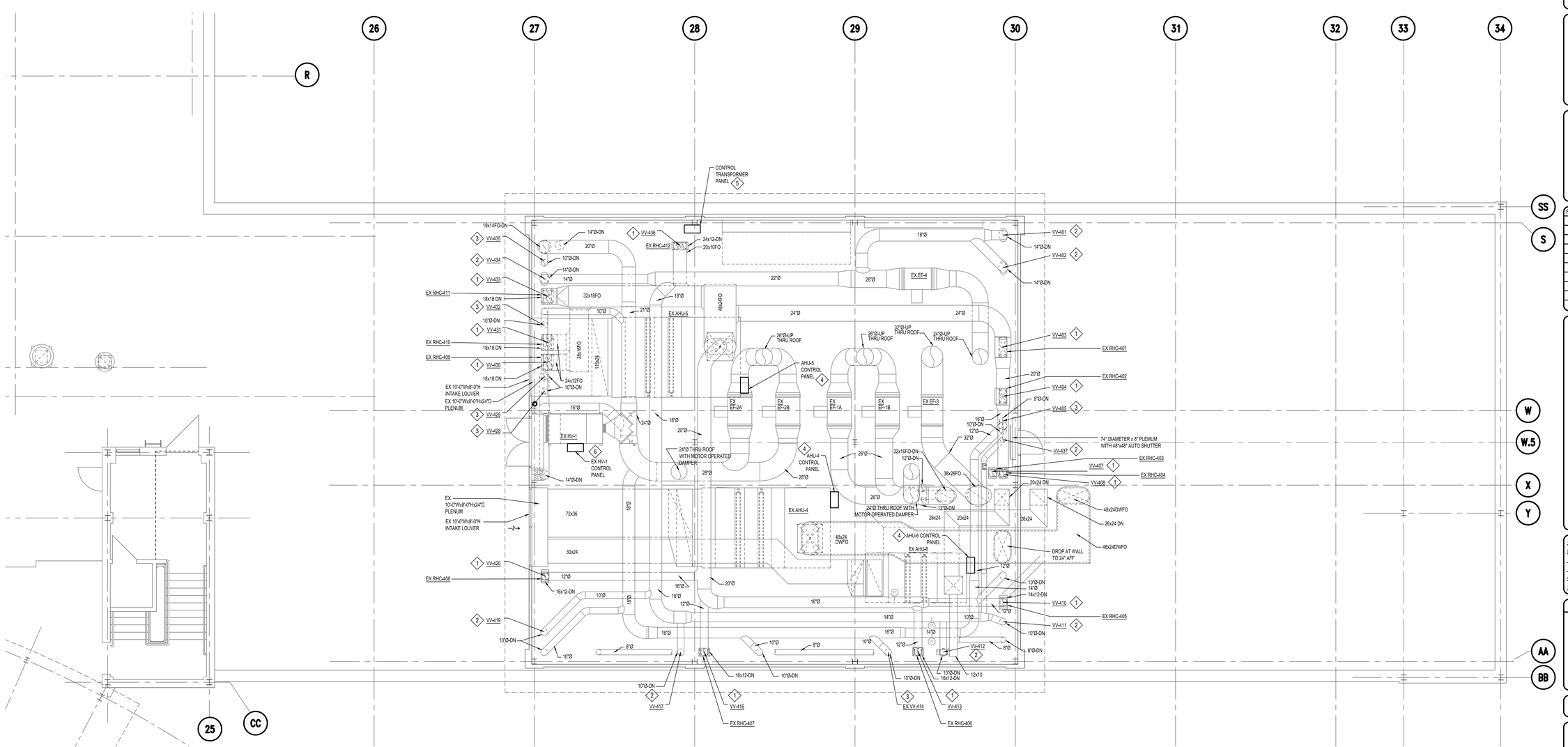

1 M205 **PENTHOUSE AREA A - NEW WORK PLAN**
Scale: 3/16" = 1'-0"

FIRE RATED LEGEND

ONE HOUR FIRE RATED PARTITION	
TWO HOUR FIRE RATED PARTITION	
THREE HOUR FIRE RATED WALL	

3/16"=1'-0" 4' 3' 2' 1' 0 4' 8' 12'

TYPICAL LAB CONTROL: 1 SUPPLY & 1 GENERAL EXHAUST VALVE

NOT TO SCALE

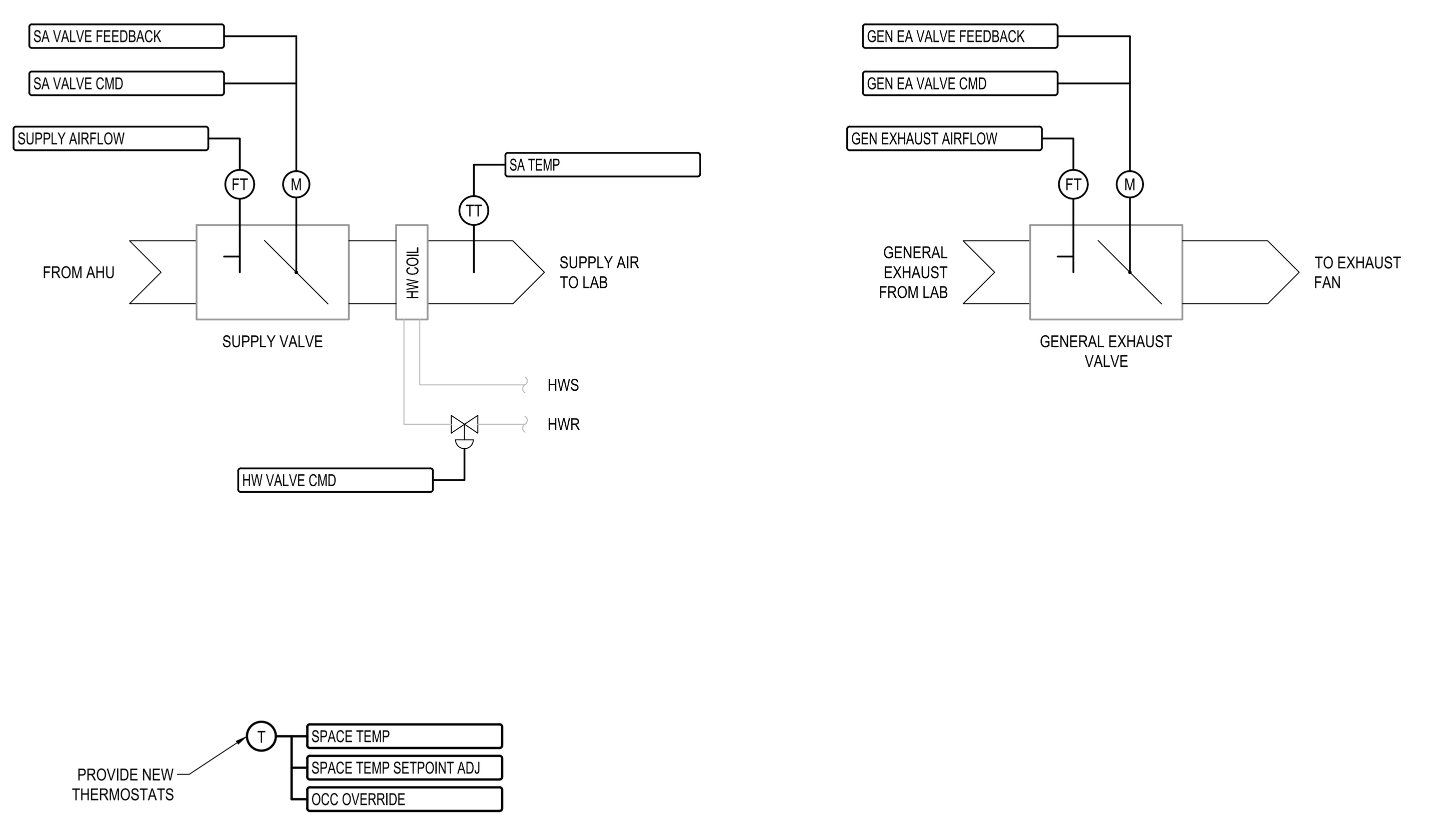

LAB & VALVE LIST

LAB	SUPPLY VALVE	GENERAL EXHAUST VALVE	LAB AIRFLOW OFFSET (CFM)
115	VV-103	VV-101	0
120	VV-118	VV-117	-100
121	VV-120	VV-119	-100
123	VV-105	VV-104	-100
126	VV-122	VV-121	-100
127	VV-124	VV-123	-100
130	VV-110	VV-109	-100
131	VV-126	VV-125	-100
134	VV-115	VV-114	-100
210	VV-205	VV-204	-200
215	VV-208	VV-207	-200
309	VV-328	VV-326	0
312	VV-319	VV-317	0
313	VV-316	VV-314	0
315	VV-313	VV-312	-100
322	VV-321	VV-320	0
401	VV-410	VV-411	0
405	VV-403	VV-401	0
415	VV-416	VV-417	0
420	VV-420	VV-419	0
40 VALVES TOTAL			

SEQUENCE OF OPERATION

OCCUPANCY MODES:
THE LAB SHALL OPERATE ACCORDING TO A USER DEFINABLE OCCUPANCY SCHEDULE. THE LAB SHALL BE IN OCCUPIED MODE MONDAY - FRIDAY, 7AM - 8PM (ADJ.).

IN OCCUPIED MODE, THE LAB SHALL MAINTAIN:
- A 76°F (ADJ.) COOLING SETPOINT
- A 70°F (ADJ.) HEATING SETPOINT

IN UNOCCUPIED MODE, THE LAB SHALL MAINTAIN:
- A 78°F (ADJ.) COOLING SETPOINT
- A 65°F (ADJ.) HEATING SETPOINT

WHEN IN UNOCCUPIED MODE, THE VALVES SHALL RESET THE MINIMUM AIRFLOW SETPOINT TO THE UNOCCUPIED MINIMUM AIRFLOWS VALUE INDICATED IN THE VALVE SCHEDULE.

UNOCCUPIED AIRFLOW SETBACK:
FOR APPLICABLE LABS, DURING UNOCCUPIED HOURS THE MINIMUM AIRFLOW SETPOINTS SHALL BE RESET LOWER TO AN UNOCCUPIED MINIMUM AIRFLOW SETPOINT (ADJ.) AS INDICATED IN THE VALVE SCHEDULE.

ZONE UNOCCUPIED OVERRIDE:
A TIMED LOCAL OVERRIDE CONTROL SHALL ALLOW AN OCCUPANT TO OVERRIDE THE SCHEDULE AND PLACE THE LAB INTO OCCUPIED MODE FOR 90 MINUTES (ADJ.). AT THE EXPIRATION OF THIS TIME, THE LAB SHALL AUTOMATICALLY RETURN TO THE SCHEDULE.

ZONE SETPOINT ADJUST:
THE OCCUPANT SHALL BE ABLE TO ADJUST THE ZONE TEMPERATURE HEATING AND COOLING SETPOINTS AT THE ZONE SENSOR BY +/- 3°F (ADJ.) SO AT TO MAINTAIN A CONSTANT DEADBAND (ADJ.) BETWEEN HEATING AND COOLING SETPOINTS.

ZONE OPTIMAL START:
THE CONTROLLER SHALL USE AN OPTIMAL START ALGORITHM FOR MORNING START-UP. THIS ALGORITHM SHALL MINIMIZE THE UNOCCUPIED WARM-UP OR COOL-DOWN PERIOD WHILE STILL ACHIEVING COMFORT CONDITIONS BY THE START OF SCHEDULED OCCUPIED PERIOD.

GENERAL EXHAUST AIRFLOW CONTROL:
THE GENERAL EXHAUST VALVE SHALL MODULATE TO MAINTAIN A GENERAL EXHAUST AIRFLOW SETPOINT. THE GENERAL EXHAUST AIRFLOW SETPOINT SHALL BE CALCULATED TO MAINTAIN A FIXED LAB AIRFLOW OFFSET SETPOINT (ADJ.) AS FOLLOWS:
- GENERAL EXHAUST AIRFLOW SETPOINT = SUPPLY AIRFLOW - LAB AIRFLOW OFFSET SETPOINT

SUPPLY AIRFLOW CONTROL:
THE SUPPLY AIR VALVE SHALL MODULATE TO MAINTAIN A SUPPLY AIRFLOW SETPOINT.

THE SUPPLY AIRFLOW SETPOINT SHALL BE RESET AS FOLLOWS:
- WHEN THE SPACE TEMPERATURE IS GREATER THAN ITS COOLING SETPOINT, THE SUPPLY AIRFLOW SETPOINT SHALL BE RESET UP BETWEEN THE MINIMUM SUPPLY AIRFLOW SETPOINT (ADJ.) AND THE MAXIMUM SUPPLY AIRFLOW SETPOINT (ADJ.) UNTIL THE SPACE IS SATISFIED.
- WHEN THE SPACE TEMPERATURE DROPS FROM THE COOLING SETPOINT TO 2°F (ADJ.) BELOW THE COOLING SETPOINT, THE SUPPLY AIRFLOW SETPOINT SHALL BE RESET LINEARLY DOWN BETWEEN THE MAXIMUM SUPPLY AIRFLOW SETPOINT (ADJ.) AND THE MINIMUM SUPPLY AIRFLOW SETPOINT (ADJ.).
- WHEN THE SPACE TEMPERATURE IS LESS THAN ITS HEATING SETPOINT, THE SUPPLY AIRFLOW SETPOINT SHALL INITIALLY MAINTAIN ITS MINIMUM VALUE (ADJ.). AS THE REHEAT COIL VALVE OPENS, THE SUPPLY AIRFLOW SETPOINT SHALL RESET UP BETWEEN THE MINIMUM SUPPLY AIRFLOW SETPOINT (ADJ.) AND THE MAXIMUM SUPPLY AIRFLOW SETPOINT (ADJ.) IN ORDER TO MAINTAIN A MAXIMUM SUPPLY AIR TEMPERATURE SETPOINT OF 95°F (ADJ.).

REHEAT COIL VALVE:
WHEN THE SPACE TEMPERATURE DROPS BELOW ITS HEATING SETPOINT, THE REHEAT COIL VALVE SHALL MODULATE OPEN TO MAINTAIN THE HEATING SETPOINT.

VALVE POSITION FEEDBACK:
THE CONTROLLER SHALL MONITOR THE VALVE POSITION FEEDBACK FOR THE FOLLOWING:
- GENERAL EXHAUST VALVE
- SUPPLY VALVE

ALARMS:
THE BAS SHALL GENERATE THE FOLLOWING ALARMS:
- HIGH SPACE TEMPERATURE: IF THE SPACE TEMPERATURE IS GREATER THAN THE COOLING SETPOINT BY 4°F (ADJ.) FOR 30 MINUTES (ADJ.)
- LOW SPACE TEMPERATURE: IF THE SPACE TEMPERATURE IS LESS THAN THE HEATING SETPOINT BY 4°F (ADJ.) FOR 30 MINUTES (ADJ.)
- LAB AIRFLOW OFFSET: IF THE LAB AIRFLOW OFFSET DIFFERS FROM SETPOINT BY MORE THAN 25% (ADJ.) FOR 10 MINUTES (ADJ.). FOR SPACES WITH A LAB AIRFLOW OFFSET OF 0 CFM, THE ALARM SHALL BE GENERATED IF THE MEASURED OFFSET DIFFERS FROM SETPOINT BY MORE THAN 25 CFM (ADJ.) FOR 10 MINUTES (ADJ.).

POINTS LIST

POINT DESCRIPTOR	POINT TYPE: DI	AI	DO	AO	VP	ALARM	TREND	OEM	NOTES
GEN EA VALVE CMD				●			●		
GEN EA VALVE FEEDBACK		●					●		
GEN EXHAUST AIRFLOW		●					●		
GEN EXHAUST AIRFLOW SETPOINT					●		●		
HW VALVE CMD				●			●		
LAB AIRFLOW OFFSET					●	●	●		
LAB AIRFLOW OFFSET SETPOINT					●		●		
OCC OVERRIDE	●						●		
OCC STATUS					●		●		
SA TEMP		●					●		
SA TEMP SETPOINT					●		●		
SA VALVE CMD				●			●		
SA VALVE FEEDBACK		●					●		
SPACE TEMP		●				●	●		
SPACE TEMP SETPOINT					●		●		
SPACE TEMP SETPOINT ADJ		●					●		
SUPPLY AIRFLOW		●					●		
SUPPLY AIRFLOW SETPOINT					●		●		

GENERAL NOTES:
1. DIGITAL POINTS SHALL BE TRENDED ON A CHANGE IN VALUE. ANALOG POINTS SHALL BE TRENDED ON A TIME INTERVAL.
2. ALL POINTS SHOWN SHALL BE DISPLAYED ON THE BAS GRAPHICS.
3. ALL CONTROL DEVICES SHOWN ON THE SCHEMATIC ARE EXISTING TO REMAIN UNLESS NOTED OTHERWISE.

TYPICAL LAB CONTROL: 1 SUPPLY, 1 GENERAL EXHAUST & 1 FUME HOOD EXHAUST VALVE

NOT TO SCALE

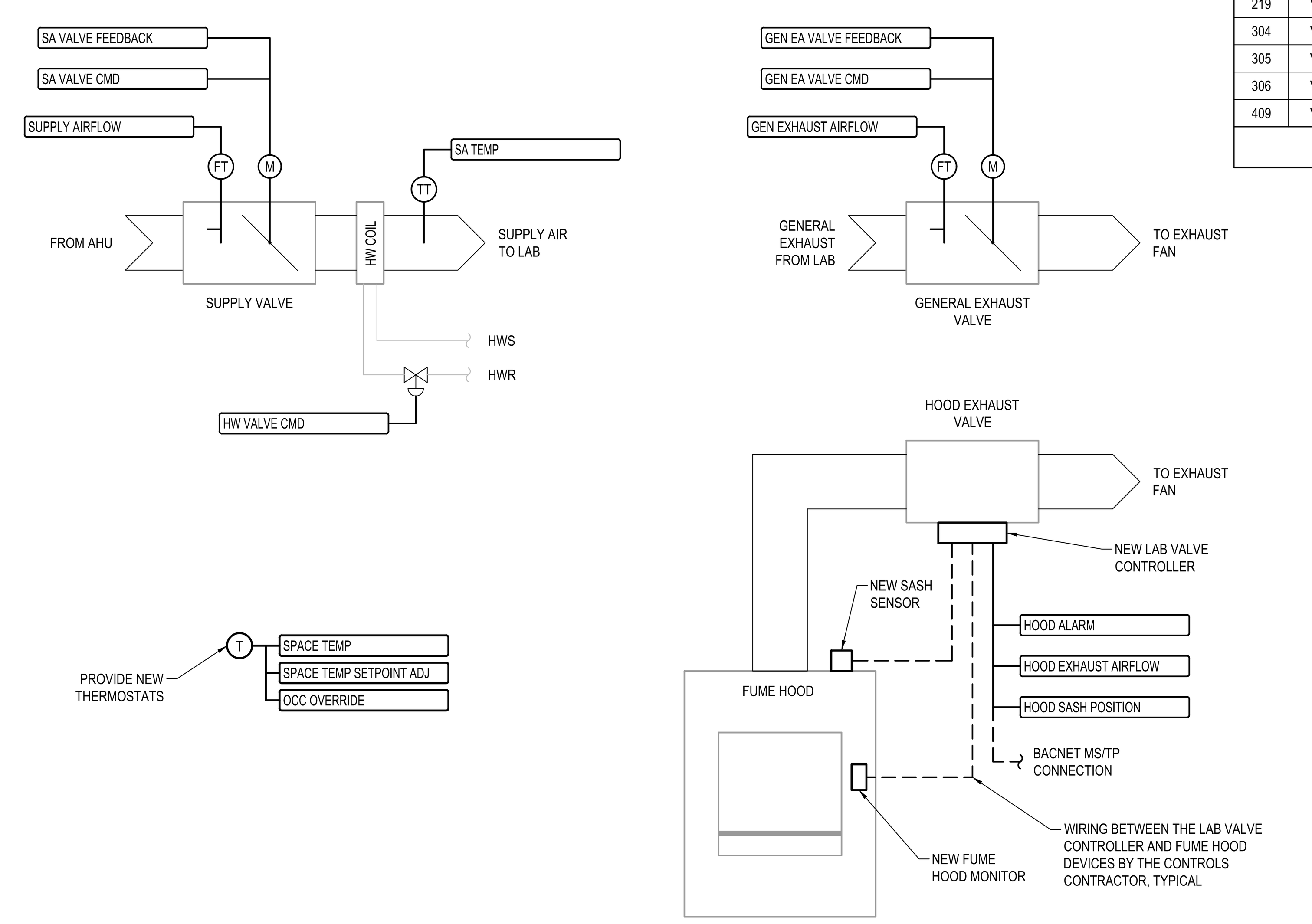

LAB & VALVE LIST

LAB	SUPPLY VALVE	GENERAL EXHAUST VALVE	HOOD EXHAUST VALVE	LAB AIRFLOW OFFSET (CFM)
125	VV-108	VV-107	VV-106	-200
136	VV-113	VV-111	VV-112	-100
201	VV-203	VV-202	VV-201	-200
214	VV-211	VV-209	VV-210	-200
219	VV-214	VV-213	VV-212	-200
304	VV-303	VV-301	VV-302	-100
305	VV-306	VV-304	VV-305	-100
306	VV-325	VV-323	VV-324	-100
409	VV-413	VV-412	VV-414	-100
27 VALVES TOTAL				

SEQUENCE OF OPERATION

OCCUPANCY MODES:
THE LAB SHALL OPERATE ACCORDING TO A USER DEFINABLE OCCUPANCY SCHEDULE. THE LAB SHALL BE IN OCCUPIED MODE MONDAY - FRIDAY, 7AM - 8PM (ADJ.).

IN OCCUPIED MODE, THE LAB SHALL MAINTAIN:
- A 76°F (ADJ.) COOLING SETPOINT
- A 70°F (ADJ.) HEATING SETPOINT

IN UNOCCUPIED MODE, THE LAB SHALL MAINTAIN:
- A 78°F (ADJ.) COOLING SETPOINT
- A 65°F (ADJ.) HEATING SETPOINT

WHEN IN UNOCCUPIED MODE, THE VALVES SHALL RESET THE MINIMUM AIRFLOW SETPOINT TO THE UNOCCUPIED MINIMUM AIRFLOWS VALUE INDICATED IN THE VALVE SCHEDULE.

UNOCCUPIED AIRFLOW SETBACK:
FOR APPLICABLE LABS, DURING UNOCCUPIED HOURS THE MINIMUM AIRFLOW SETPOINTS SHALL BE RESET LOWER TO AN UNOCCUPIED MINIMUM AIRFLOW SETPOINT (ADJ.) AS INDICATED IN THE VALVE SCHEDULE.

ZONE UNOCCUPIED OVERRIDE:
A TIMED LOCAL OVERRIDE CONTROL SHALL ALLOW AN OCCUPANT TO OVERRIDE THE SCHEDULE AND PLACE THE LAB INTO OCCUPIED MODE FOR 90 MINUTES (ADJ.). AT THE EXPIRATION OF THIS TIME, THE LAB SHALL AUTOMATICALLY RETURN TO THE SCHEDULE.

ZONE SETPOINT ADJUST:
THE OCCUPANT SHALL BE ABLE TO ADJUST THE ZONE TEMPERATURE HEATING AND COOLING SETPOINTS AT THE ZONE SENSOR BY +/- 3°F (ADJ.) SO AT TO MAINTAIN A CONSTANT DEADBAND (ADJ.) BETWEEN HEATING AND COOLING SETPOINTS.

ZONE OPTIMAL START:
THE CONTROLLER SHALL USE AN OPTIMAL START ALGORITHM FOR MORNING START-UP. THIS ALGORITHM SHALL MINIMIZE THE UNOCCUPIED WARM-UP OR COOL-DOWN PERIOD WHILE STILL ACHIEVING COMFORT CONDITIONS BY THE START OF SCHEDULED OCCUPIED PERIOD.

FUME HOOD EXHAUST AIRFLOW CONTROL:
EACH FUME HOOD EXHAUST VALVE SHALL BE PROVIDED WITH A CONTROLLER BY THE VALVE MANUFACTURER. THE VALVE MANUFACTURER SHALL ALSO PROVIDE THE FUME HOOD MONITOR AND SASH SENSORS FOR EACH HOOD. THE LAB VALVE CONTROLLER SHALL MODULATE THE VALVE POSITION TO MAINTAIN A FACE VELOCITY SETPOINT AT THE HOOD.

THE BAS SHALL MONITOR THE FOLLOWING HARDWIRED POINTS FROM THE LAB VALVE CONTROLLER:
- HOOD ALARM
- HOOD EXHAUST AIRFLOW
- HOOD SASH POSITION

THE BAS SHALL MONITOR THE FOLLOWING POINTS VIA BACNET MS/TP CONNECTION FROM THE LAB VALVE CONTROLLER:
- HOOD EXHAUST VALVE POSITION FEEDBACK
- HOOD FACE VELOCITY
- HOOD FACE VELOCITY SETPOINT

THE CONTROLS CONTRACTOR SHALL COORDINATE WITH THE OWNER/ENGINEER FOR ANY ADDITIONAL BACNET MONITORING POINTS DESIRED.

GENERAL EXHAUST AIRFLOW CONTROL:
THE GENERAL EXHAUST VALVE SHALL MODULATE TO MAINTAIN A GENERAL EXHAUST AIRFLOW SETPOINT. THE GENERAL EXHAUST AIRFLOW SETPOINT SHALL BE CALCULATED TO MAINTAIN A FIXED LAB AIRFLOW OFFSET SETPOINT (ADJ.) AS FOLLOWS:
- GENERAL EXHAUST AIRFLOW SETPOINT = SUPPLY AIRFLOW - FUME HOOD EXHAUST AIRFLOW - LAB AIRFLOW OFFSET SETPOINT

SUPPLY AIRFLOW CONTROL:
THE SUPPLY AIR VALVE SHALL MODULATE TO MAINTAIN A SUPPLY AIRFLOW SETPOINT.

THE SUPPLY AIRFLOW SETPOINT SHALL BE RESET AS FOLLOWS:
- WHEN THE SPACE TEMPERATURE IS GREATER THAN ITS COOLING SETPOINT, THE SUPPLY AIRFLOW SETPOINT SHALL BE RESET UP BETWEEN THE MINIMUM SUPPLY AIRFLOW SETPOINT (ADJ.) AND THE MAXIMUM SUPPLY AIRFLOW SETPOINT (ADJ.) UNTIL THE SPACE IS SATISFIED.
- WHEN THE SPACE TEMPERATURE DROPS FROM THE COOLING SETPOINT TO 2°F (ADJ.) BELOW THE COOLING SETPOINT, THE SUPPLY AIRFLOW SETPOINT SHALL BE RESET LINEARLY DOWN BETWEEN THE MAXIMUM SUPPLY AIRFLOW SETPOINT (ADJ.) AND THE MINIMUM SUPPLY AIRFLOW SETPOINT (ADJ.).
- WHEN THE SPACE TEMPERATURE IS LESS THAN ITS HEATING SETPOINT, THE SUPPLY AIRFLOW SETPOINT SHALL INITIALLY MAINTAIN ITS MINIMUM VALUE (ADJ.). AS THE REHEAT COIL VALVE OPENS, THE SUPPLY AIRFLOW SETPOINT SHALL RESET UP BETWEEN THE MINIMUM SUPPLY AIRFLOW SETPOINT (ADJ.) AND THE MAXIMUM SUPPLY AIRFLOW SETPOINT (ADJ.) IN ORDER TO MAINTAIN A MAXIMUM SUPPLY AIR TEMPERATURE SETPOINT OF 95°F (ADJ.).

REHEAT COIL VALVE:
WHEN THE SPACE TEMPERATURE DROPS BELOW ITS HEATING SETPOINT, THE REHEAT COIL VALVE SHALL MODULATE OPEN TO MAINTAIN THE HEATING SETPOINT.

VALVE POSITION FEEDBACK:
THE CONTROLLER SHALL MONITOR THE VALVE POSITION FEEDBACK FOR THE FOLLOWING:
- GENERAL EXHAUST VALVE
- SUPPLY VALVE

ALARMS:
THE BAS SHALL GENERATE THE FOLLOWING ALARMS:
- HIGH SPACE TEMPERATURE: IF THE SPACE TEMPERATURE IS GREATER THAN THE COOLING SETPOINT BY 4°F (ADJ.) FOR 30 MINUTES (ADJ.)
- LOW SPACE TEMPERATURE: IF THE SPACE TEMPERATURE IS LESS THAN THE HEATING SETPOINT BY 4°F (ADJ.) FOR 30 MINUTES (ADJ.)
- LAB AIRFLOW OFFSET: IF THE LAB AIRFLOW OFFSET DIFFERS FROM SETPOINT BY MORE THAN 25% (ADJ.) FOR 10 MINUTES (ADJ.)
- HOOD ALARM: IF THE HOOD ALARM FROM THE LAB VALVE CONTROLLER IS ACTIVE FOR 5 MINUTES (ADJ.)
- SASH LEFT OPEN: IF THE HOOD SASH POSITION IS MORE THAN 10% (ADJ.) OPEN FOR 4 HOURS (ADJ.)

POINTS LIST

POINT DESCRIPTOR	POINT TYPE: DI	AI	DO	AO	VP	ALARM	TREND	OEM	NOTES
GEN EA VALVE CMD				●			●		
GEN EA VALVE FEEDBACK		●					●		
GEN EXHAUST AIRFLOW		●					●		
GEN EXHAUST AIRFLOW SETPOINT					●		●		
HOOD ALARM	●					●	●		
HOOD EA VALVE FEEDBACK					●		●	●	NOTE 1
HOOD EXHAUST AIRFLOW		●					●		
HOOD EXHAUST AIRFLOW SETPOINT					●		●		
HOOD FACE VELOCITY					●		●	●	NOTE 1
HOOD FACE VELOCITY SETPOINT					●		●	●	NOTE 1
HOOD SASH POSITION		●				●	●		
HW VALVE CMD				●			●		
LAB AIRFLOW OFFSET					●	●	●		
LAB AIRFLOW OFFSET SETPOINT					●		●		
OCC OVERRIDE	●						●		
OCC STATUS					●		●		
SA TEMP		●					●		
SA VALVE CMD				●			●		
SA VALVE FEEDBACK		●					●		
SPACE TEMP		●				●	●		
SPACE TEMP SETPOINT					●		●		
SPACE TEMP SETPOINT ADJ		●					●		
SUPPLY AIRFLOW		●					●		
SUPPLY AIRFLOW SETPOINT					●		●		

GENERAL NOTES:
1. DIGITAL POINTS SHALL BE TRENDED ON A CHANGE IN VALUE. ANALOG POINTS SHALL BE TRENDED ON A TIME INTERVAL.
2. ALL POINTS SHOWN SHALL BE DISPLAYED ON THE BAS GRAPHICS.
3. ALL CONTROL DEVICES SHOWN ON THE SCHEMATIC ARE EXISTING TO REMAIN UNLESS NOTED OTHERWISE.

KEY NOTES:
1. THIS POINT IS FROM THE LAB VALVE CONTROLLER VIA BACNET MS/TP.

McKIM & CREED
Venture IV Building, Suite 500
1730 Varsity Drive
Raleigh, North Carolina 27606
Phone: (919) 233-8091, Fax: (919) 233-8031
www.mckimcreed.com

Western Carolina UNIVERSITY

NORTH CAROLINA PROFESSIONAL SEAL 045325 ENGINEER STEVEN M. THIGPEN 3-2-23

REV	REVISION DESCRIPTION	DATE

STILLWELL BUILDING HVAC CONTROLS REPLACEMENT
WESTERN CAROLINA UNIVERSITY
SCO ID: 22-24466-01A
CODE: 42126 ITEM: 316

DATE	3/2/2023
M&C PROJ. #	07020-0003
DRAWN	SMT
DESIGNED	SMT
CHECKED	WTR
PROJ. MGR.	WTR

SCALE
HORIZONTAL: AS NOTED
VERTICAL: N/A

BID DOCUMENTS

MECHANICAL CONTROLS SCHEMATICS

M301

TYPICAL LAB CONTROL: SUPPLY VALVE(S) & FUME HOOD EXHAUST VALVE(S)

NOT TO SCALE

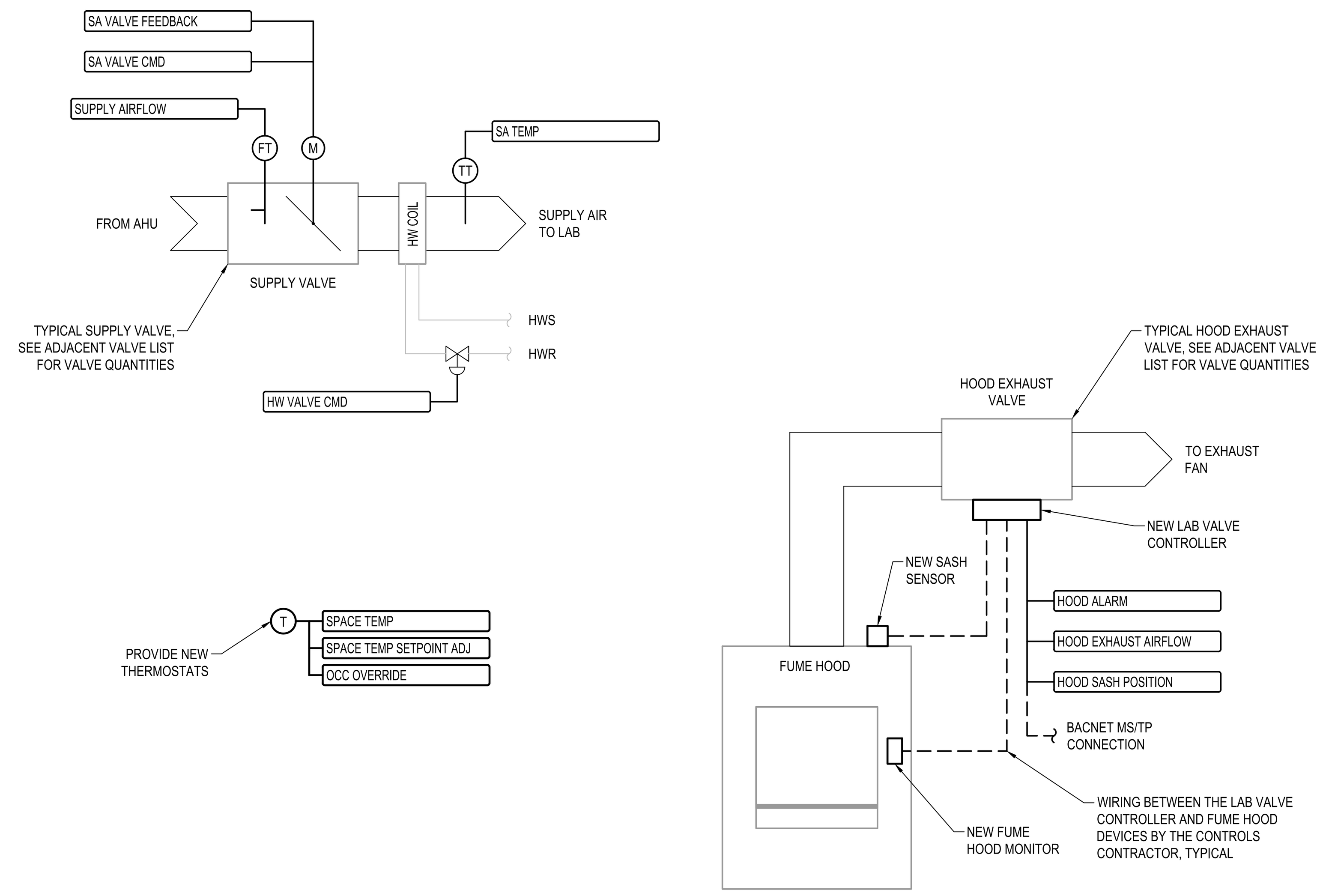

LAB & VALVE LIST

LAB	SUPPLY VALVES	HOOD EXHAUST VALVES	LAB AIRFLOW OFFSET (CFM)
314	VV-311	VV-307 VV-309	-100
419	VV-430 VV-431 VV-433	VV-423 VV-424 VV-425 VV-428 VV-435	-200
12 VALVES TOTAL			

SEQUENCE OF OPERATION

OCCUPANCY MODES:
THE LAB SHALL OPERATE ACCORDING TO A USER DEFINABLE OCCUPANCY SCHEDULE. THE LAB SHALL BE IN OCCUPIED MODE MONDAY - FRIDAY, 7AM - 8PM (ADJ.).

IN OCCUPIED MODE, THE LAB SHALL MAINTAIN:
- A 76°F (ADJ.) COOLING SETPOINT
- A 70°F (ADJ.) HEATING SETPOINT

IN UNOCCUPIED MODE, THE LAB SHALL MAINTAIN:
- A 78°F (ADJ.) COOLING SETPOINT
- A 65°F (ADJ.) HEATING SETPOINT

WHEN IN UNOCCUPIED MODE, THE VALVES SHALL RESET THE MINIMUM AIRFLOW SETPOINT TO THE UNOCCUPIED MINIMUM AIRFLOWS VALUE INDICATED IN THE VALVE SCHEDULE.

ZONE UNOCCUPIED OVERRIDE:
A TIMED LOCAL OVERRIDE CONTROL SHALL ALLOW AN OCCUPANT TO OVERRIDE THE SCHEDULE AND PLACE THE LAB INTO OCCUPIED MODE FOR 90 MINUTES (ADJ.). AT THE EXPIRATION OF THIS TIME, THE LAB SHALL AUTOMATICALLY RETURN TO THE SCHEDULE.

ZONE SETPOINT ADJUST:
THE OCCUPANT SHALL BE ABLE TO ADJUST THE ZONE TEMPERATURE HEATING AND COOLING SETPOINTS AT THE ZONE SENSOR BY +/- 3°F (ADJ.) SO AT TO MAINTAIN A CONSTANT DEADBAND (ADJ.) BETWEEN HEATING AND COOLING SETPOINTS.

ZONE OPTIMAL START:
THE CONTROLLER SHALL USE AN OPTIMAL START ALGORITHM FOR MORNING START-UP. THIS ALGORITHM SHALL MINIMIZE THE UNOCCUPIED WARM-UP OR COOL-DOWN PERIOD WHILE STILL ACHIEVING COMFORT CONDITIONS BY THE START OF SCHEDULED OCCUPIED PERIOD.

FUME HOOD EXHAUST AIRFLOW CONTROL:
EACH FUME HOOD EXHAUST VALVE SHALL BE PROVIDED WITH A CONTROLLER BY THE VALVE MANUFACTURER. THE VALVE MANUFACTURER SHALL ALSO PROVIDE THE FUME HOOD MONITOR AND SASH SENSOR FOR EACH HOOD. THE LAB VALVE CONTROLLER SHALL MODULATE THE VALVE POSITION TO MAINTAIN A FACE VELOCITY SETPOINT AT THE HOOD.

THE BAS SHALL MONITOR THE FOLLOWING HARDWIRED POINTS FROM THE LAB VALVE CONTROLLER:
- HOOD ALARM
- HOOD EXHAUST AIRFLOW
- HOOD SASH POSITION

THE BAS SHALL MONITOR THE FOLLOWING POINTS VIA BACNET MS/TP CONNECTION FROM THE LAB VALVE CONTROLLER:
- HOOD EXHAUST VALVE POSITION FEEDBACK
- HOOD FACE VELOCITY
- HOOD FACE VELOCITY SETPOINT

THE CONTROLS CONTRACTOR SHALL COORDINATE WITH THE OWNER/ENGINEER FOR ANY ADDITIONAL BACNET MONITORING POINTS DESIRED.

SUPPLY AIRFLOW CONTROL:
THE SUPPLY AIR VALVE(S) SHALL MODULATE TO MAINTAIN A SUPPLY AIRFLOW SETPOINT. THE SUPPLY AIRFLOW SETPOINT SHALL BE CALCULATED TO MAINTAIN A FIXED LAB AIRFLOW OFFSET SETPOINT (ADJ.) AS FOLLOWS:
- SUPPLY AIRFLOW SETPOINT = TOTAL FUME HOOD EXHAUST AIRFLOW + LAB AIRFLOW OFFSET SETPOINT

WHERE A LAB HAS MORE THAN ONE SUPPLY AIR VALVE, THE TOTAL SUPPLY AIRFLOW SETPOINT FOR THE LAB SHALL BE DIVIDED EQUALLY AMONG THE SUPPLY VALVES.

REHEAT COIL VALVE:
WHEN THE SPACE TEMPERATURE DROPS BELOW ITS HEATING SETPOINT, THE REHEAT COIL VALVE SHALL MODULATE OPEN TO MAINTAIN THE HEATING SETPOINT.

VALVE POSITION FEEDBACK:
THE CONTROLLER SHALL MONITOR THE VALVE POSITION FEEDBACK FOR THE FOLLOWING:
- SUPPLY VALVE(S)

ALARMS:
THE BAS SHALL GENERATE THE FOLLOWING ALARMS:
- HIGH SPACE TEMPERATURE: IF THE SPACE TEMPERATURE IS GREATER THAN THE COOLING SETPOINT BY 4°F (ADJ.) FOR 30 MINUTES (ADJ.)
- LOW SPACE TEMPERATURE: IF THE SPACE TEMPERATURE IS LESS THAN THE HEATING SETPOINT BY 4°F (ADJ.) FOR 30 MINUTES (ADJ.)
- LAB AIRFLOW OFFSET: IF THE LAB AIRFLOW OFFSET DIFFERS FROM SETPOINT BY MORE THAN 25% (ADJ.) FOR 10 MINUTES (ADJ.)
- HOOD ALARM: IF THE HOOD ALARM FROM THE LAB VALVE CONTROLLER IS ACTIVE FOR 5 MINUTES (ADJ.)
- SASH LEFT OPEN: IF THE HOOD SASH POSITION IS MORE THAN 10% (ADJ.) OPEN FOR 4 HOURS (ADJ.)

POINTS LIST

POINT DESCRIPTOR	DI	AI	DO	AO	VP	ALARM	TREND	OEM	NOTES
HOOD ALARM	●					●	●		
HOOD EA VALVE FEEDBACK					●		●	●	NOTE 1
HOOD EXHAUST AIRFLOW		●					●		
HOOD EXHAUST AIRFLOW SETPOINT					●		●		
HOOD FACE VELOCITY					●		●	●	NOTE 1
HOOD FACE VELOCITY SETPOINT					●		●	●	NOTE 1
HOOD SASH POSITION		●					●		
HW VALVE CMD				●			●		
LAB AIRFLOW OFFSET					●	●	●		
LAB AIRFLOW OFFSET SETPOINT					●		●		
OCC OVERRIDE	●						●		
OCC STATUS					●		●		
SA TEMP		●					●		
SA VALVE CMD				●			●		
SA VALVE FEEDBACK		●					●		
SPACE TEMP		●				●	●		
SPACE TEMP SETPOINT					●		●		
SPACE TEMP SETPOINT ADJ		●					●		
SUPPLY AIRFLOW		●					●		
SUPPLY AIRFLOW SETPOINT					●		●		

GENERAL NOTES:
1. DIGITAL POINTS SHALL BE TRENDED ON A CHANGE IN VALUE. ANALOG POINTS SHALL BE TRENDED ON A TIME INTERVAL.
2. ALL POINTS SHOWN SHALL BE DISPLAYED ON THE BAS GRAPHICS.
3. THERE ARE MULTIPLE SUPPLY AND/OR HOOD EXHAUST VALVES IN EACH LAB. POINTS ASSOCIATED WITH EACH VALVE SHALL BE DUPLICATED FOR EACH SIMILAR VALVE. SEE VALVE LIST ABOVE FOR QUANTITIES IN EACH LAB.
4. ALL CONTROL DEVICES SHOWN ON THE SCHEMATIC ARE EXISTING TO REMAIN UNLESS NOTED OTHERWISE.

KEY NOTES:
1. THIS POINT IS FROM THE LAB VALVE CONTROLLER VIA BACNET MS/TP.

TYPICAL LAB CONTROL: 2 LABS WITH PASS-THROUGH HOOD

NOT TO SCALE

LAB & VALVE LIST

LAB	SUPPLY VALVE	GENERAL EXHAUST VALVE	HOOD EXHAUST VALVE	LAB AIRFLOW OFFSET (CFM)
403	VV-408	VV-402	VV-405	-200
404	VV-404			
412	VV-407	VV-434	VV-429	-400
413	VV-436			
8 VALVES TOTAL				

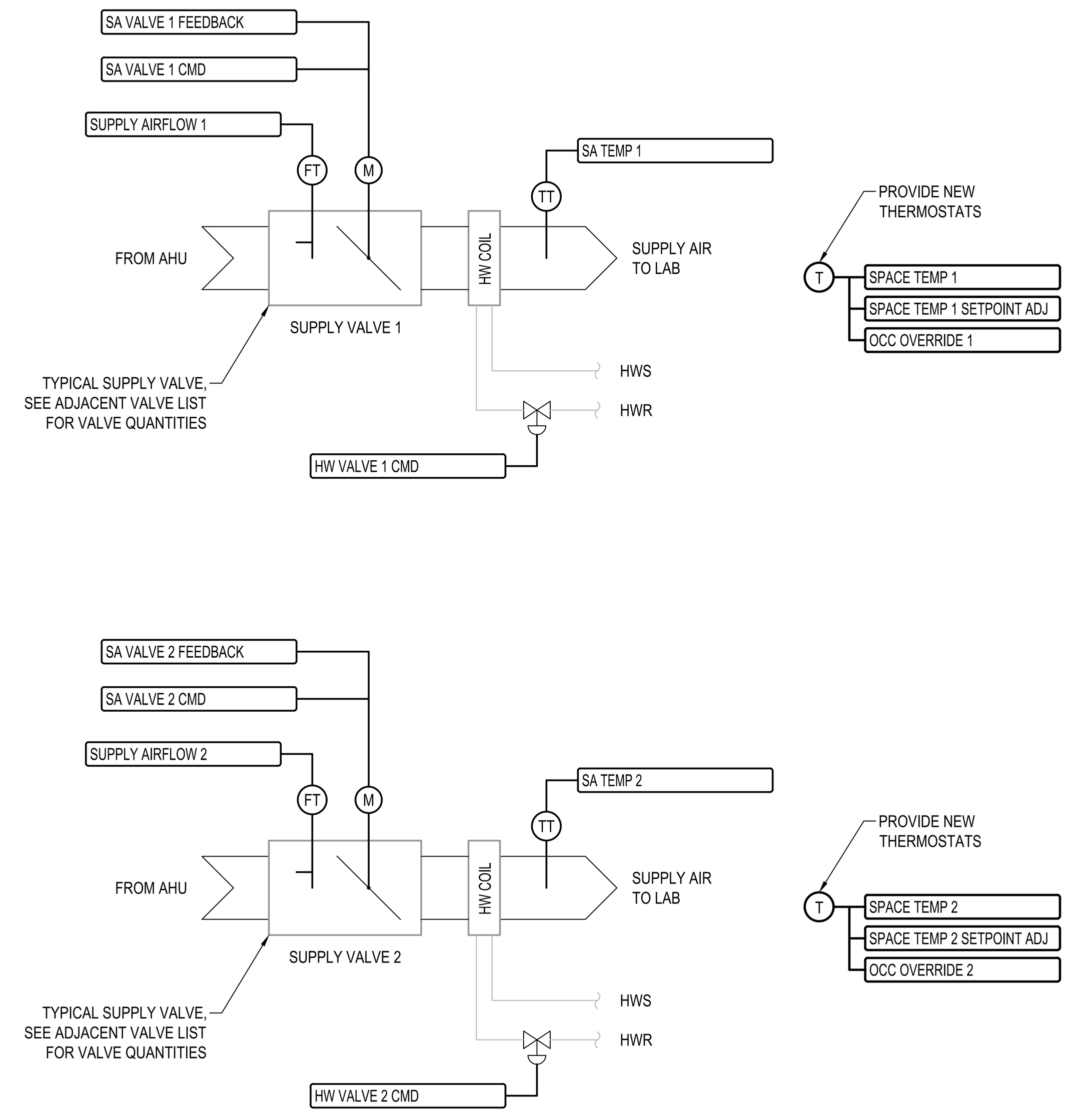

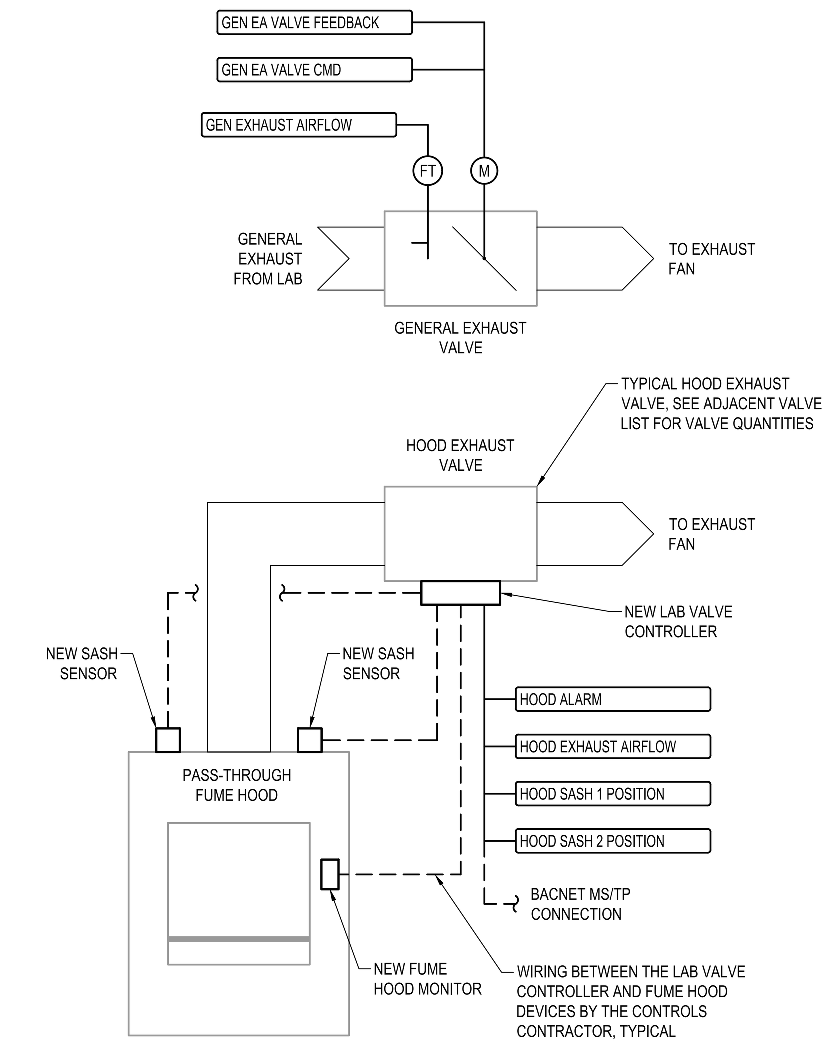

SEQUENCE OF OPERATION

COMBINED LAB CONTROL:
THE LAB CONSISTS OF TWO SEPARATE LABS WITH A PASS-THROUGH HOOD LOCATED BETWEEN THEM.

THE FOLLOWING SHALL HAVE COMBINED CONTROL BETWEEN THE TWO LABS:
- OCCUPANCY MODE
- LAB PRESSURIZATION

THE FOLLOWING SHALL HAVE SEPARATE CONTROL FOR EACH LAB:
- SPACE TEMPERATURE

OCCUPANCY MODES:
THE LAB SHALL OPERATE ACCORDING TO A USER DEFINABLE OCCUPANCY SCHEDULE. THE LAB SHALL BE IN OCCUPIED MODE MONDAY - FRIDAY, 7AM - 8PM (ADJ.).

IN OCCUPIED MODE, THE LAB SHALL MAINTAIN:
- A 76°F (ADJ.) COOLING SETPOINT
- A 70°F (ADJ.) HEATING SETPOINT

IN UNOCCUPIED MODE, THE LAB SHALL MAINTAIN:
- A 78°F (ADJ.) COOLING SETPOINT
- A 65°F (ADJ.) HEATING SETPOINT

WHEN IN UNOCCUPIED MODE, THE VALVES SHALL RESET THE MINIMUM AIRFLOW SETPOINT TO THE UNOCCUPIED MINIMUM AIRFLOWS VALUE INDICATED IN THE VALVE SCHEDULE.

UNOCCUPIED AIRFLOW SETBACK:
FOR APPLICABLE LABS, DURING UNOCCUPIED HOURS THE MINIMUM AIRFLOW SETPOINTS SHALL BE RESET LOWER TO AN UNOCCUPIED MINIMUM AIRFLOW SETPOINT (ADJ.) AS INDICATED IN THE VALVE SCHEDULE.

ZONE UNOCCUPIED OVERRIDE:
A TIMED LOCAL OVERRIDE CONTROL SHALL ALLOW AN OCCUPANT TO OVERRIDE THE SCHEDULE AND PLACE THE LAB INTO OCCUPIED MODE FOR 90 MINUTES (ADJ.). AT THE EXPIRATION OF THIS TIME, THE LAB SHALL AUTOMATICALLY RETURN TO THE SCHEDULE.

ZONE SETPOINT ADJUST:
THE OCCUPANT SHALL BE ABLE TO ADJUST THE ZONE TEMPERATURE HEATING AND COOLING SETPOINTS AT THE ZONE SENSOR BY +/- 3°F (ADJ.) SO AT TO MAINTAIN A CONSTANT DEADBAND (ADJ.) BETWEEN HEATING AND COOLING SETPOINTS.

ZONE OPTIMAL START:
THE CONTROLLER SHALL USE AN OPTIMAL START ALGORITHM FOR MORNING START-UP. THIS ALGORITHM SHALL MINIMIZE THE UNOCCUPIED WARM-UP OR COOL-DOWN PERIOD WHILE STILL ACHIEVING COMFORT CONDITIONS BY THE START OF SCHEDULED OCCUPIED PERIOD.

FUME HOOD EXHAUST AIRFLOW CONTROL:
EACH FUME HOOD EXHAUST VALVE SHALL BE PROVIDED WITH A CONTROLLER BY THE VALVE MANUFACTURER. THE VALVE MANUFACTURER SHALL ALSO PROVIDE THE FUME HOOD MONITOR AND SASH SENSORS FOR EACH HOOD. THE LAB VALVE CONTROLLER SHALL MODULATE THE VALVE POSITION TO MAINTAIN A FACE VELOCITY SETPOINT AT THE HOOD.

THE BAS SHALL MONITOR THE FOLLOWING HARDWIRED POINTS FROM THE LAB VALVE CONTROLLER:
- HOOD ALARM
- HOOD EXHAUST AIRFLOW
- HOOD SASH 1 POSITION
- HOOD SASH 2 POSITION

THE BAS SHALL MONITOR THE FOLLOWING POINTS VIA BACNET MS/TP CONNECTION FROM THE LAB VALVE CONTROLLER:
- HOOD EXHAUST VALVE POSITION FEEDBACK
- HOOD FACE VELOCITY 1
- HOOD FACE VELOCITY 2
- HOOD FACE VELOCITY SETPOINT

THE CONTROLS CONTRACTOR SHALL COORDINATE WITH THE OWNER/ENGINEER FOR ANY ADDITIONAL BACNET MONITORING POINTS DESIRED.

GENERAL EXHAUST AIRFLOW CONTROL:
THE GENERAL EXHAUST VALVE SHALL MODULATE TO MAINTAIN A GENERAL EXHAUST AIRFLOW SETPOINT. THE GENERAL EXHAUST AIRFLOW SETPOINT SHALL BE CALCULATED TO MAINTAIN A FIXED LAB AIRFLOW OFFSET SETPOINT (ADJ.) AS FOLLOWS:
- GENERAL EXHAUST AIRFLOW SETPOINT = SUPPLY VALVE 1 AIRFLOW + SUPPLY VALVE 2 AIRFLOW - FUME HOOD EXHAUST AIRFLOW - LAB AIRFLOW OFFSET SETPOINT

SUPPLY AIRFLOW CONTROL:
EACH SUPPLY AIR VALVE SHALL MODULATE TO MAINTAIN ITS OWN SUPPLY AIRFLOW SETPOINT.

THE SUPPLY AIRFLOW SETPOINT FOR EACH VALVE SHALL BE RESET AS FOLLOWS:
- WHEN THE SPACE TEMPERATURE IS GREATER THAN ITS COOLING SETPOINT, THE SUPPLY AIRFLOW SETPOINT SHALL BE RESET UP BETWEEN THE MINIMUM SUPPLY AIRFLOW SETPOINT (ADJ.) AND THE MAXIMUM SUPPLY AIRFLOW SETPOINT (ADJ.) UNTIL THE SPACE IS SATISFIED.
- WHEN THE SPACE TEMPERATURE DROPS FROM THE COOLING SETPOINT TO 2°F (ADJ.) BELOW THE COOLING SETPOINT, THE SUPPLY AIRFLOW SETPOINT SHALL BE RESET LINEARLY DOWN BETWEEN THE MAXIMUM SUPPLY AIRFLOW SETPOINT (ADJ.) AND THE MINIMUM SUPPLY AIRFLOW SETPOINT (ADJ.).
- WHEN THE SPACE TEMPERATURE IS LESS THAN ITS HEATING SETPOINT, THE SUPPLY AIRFLOW SETPOINT SHALL INITIALLY MAINTAIN ITS MINIMUM VALUE (ADJ.). AS THE REHEAT COIL VALVE OPENS, THE SUPPLY AIRFLOW SETPOINT SHALL RESET UP BETWEEN THE MINIMUM SUPPLY AIRFLOW SETPOINT (ADJ.) AND THE MAXIMUM SUPPLY AIRFLOW SETPOINT (ADJ.) IN ORDER TO MAINTAIN A MAXIMUM SUPPLY AIR TEMPERATURE SETPOINT OF 95°F (ADJ.).

REHEAT COIL VALVE:
WHEN THE SPACE TEMPERATURE DROPS BELOW ITS HEATING SETPOINT, THE REHEAT COIL VALVE SHALL MODULATE OPEN TO MAINTAIN THE HEATING SETPOINT.

VALVE POSITION FEEDBACK:
THE CONTROLLER SHALL MONITOR THE VALVE POSITION FEEDBACK FOR THE FOLLOWING:
- GENERAL EXHAUST VALVE
- SUPPLY VALVE 1
- SUPPLY VALVE 2

ALARMS:
THE BAS SHALL GENERATE THE FOLLOWING ALARMS:
- HIGH SPACE TEMPERATURE: IF THE SPACE TEMPERATURE IS GREATER THAN THE COOLING SETPOINT BY 4°F (ADJ.) FOR 30 MINUTES (ADJ.)
- LOW SPACE TEMPERATURE: IF THE SPACE TEMPERATURE IS LESS THAN THE HEATING SETPOINT BY 4°F (ADJ.) FOR 30 MINUTES (ADJ.)
- LAB AIRFLOW OFFSET: IF THE LAB AIRFLOW OFFSET DIFFERS FROM SETPOINT BY MORE THAN 25% (ADJ.) FOR 10 MINUTES (ADJ.)
- HOOD ALARM: IF THE HOOD ALARM FROM THE LAB VALVE CONTROLLER IS ACTIVE FOR 5 MINUTES (ADJ.)
- SASH LEFT OPEN: IF THE HOOD SASH POSITION IS MORE THAN 10% (ADJ.) OPEN FOR 4 HOURS (ADJ.)
- BOTH SASHES OPEN: IF BOTH SASHES ARE MORE THAN 10% OPEN (ADJ.) FOR 10 MINUTES (ADJ.)

POINTS LIST

POINT DESCRIPTOR	DI	AI	DO	AO	VP	ALARM	TREND	OEM	NOTES
GEN EA VALVE CMD				●			●		
GEN EA VALVE FEEDBACK		●					●		
GEN EXHAUST AIRFLOW		●					●		
GEN EXHAUST AIRFLOW SETPOINT					●		●		
HOOD ALARM	●					●	●		
HOOD EA VALVE FEEDBACK					●		●	●	NOTE 1
HOOD EXHAUST AIRFLOW		●					●		
HOOD EXHAUST AIRFLOW SETPOINT					●		●		
HOOD FACE VELOCITY 1					●		●	●	NOTE 1
HOOD FACE VELOCITY 2					●		●	●	NOTE 1
HOOD FACE VELOCITY SETPOINT					●		●	●	NOTE 1
HOOD SASH 1 POSITION		●					●		
HOOD SASH 2 POSITION		●					●		
HW VALVE 1 CMD				●			●		
HW VALVE 2 CMD				●			●		
LAB AIRFLOW OFFSET					●	●	●		
LAB AIRFLOW OFFSET SETPOINT					●		●		
OCC OVERRIDE 1	●						●		
OCC OVERRIDE 2	●						●		
OCC STATUS					●		●		
SA TEMP 1		●					●		
SA TEMP 2		●					●		
SA VALVE 1 CMD				●			●		
SA VALVE 2 CMD				●			●		
SA VALVE 1 FEEDBACK		●					●		
SA VALVE 2 FEEDBACK		●					●		
SPACE TEMP 1		●				●	●		
SPACE TEMP 2		●				●	●		
SPACE TEMP 1 SETPOINT					●		●		
SPACE TEMP 2 SETPOINT					●		●		
SPACE TEMP 1 SETPOINT ADJ		●					●		
SPACE TEMP 2 SETPOINT ADJ		●					●		
SUPPLY AIRFLOW 1		●					●		
SUPPLY AIRFLOW 2		●					●		
SUPPLY AIRFLOW 1 SETPOINT					●		●		
SUPPLY AIRFLOW 2 SETPOINT					●		●		

GENERAL NOTES:
1. DIGITAL POINTS SHALL BE TRENDED ON A CHANGE IN VALUE. ANALOG POINTS SHALL BE TRENDED ON A TIME INTERVAL.
2. ALL POINTS SHOWN SHALL BE DISPLAYED ON THE BAS GRAPHICS.
3. SUPPLY VALVES AND SPACE SENSORS ARE NOTED AS "1" OR "2" FOR THE TWO VALVES SERVING THE LABS. ACTUAL POINT NAMES SHALL UTILIZE THE ACTUAL LAB NUMBER.
4. ALL CONTROL DEVICES SHOWN ON THE SCHEMATIC ARE EXISTING TO REMAIN UNLESS NOTED OTHERWISE.

KEY NOTES:
1. THIS POINT IS FROM THE LAB VALVE CONTROLLER VIA BACNET MS/TP.

MCKIM & CREED
Venture IV Building, Suite 500
1730 Varsity Drive
Raleigh, North Carolina 27606
Phone: (919) 233-8091, Fax: (919) 233-8031
www.mckimcreed.com

Western Carolina UNIVERSITY

NORTH CAROLINA PROFESSIONAL SEAL 045325 ENGINEER STEVEN M. THIGPEN 3-2-23

REV	REVISION DESCRIPTION	DATE

STILLWELL BUILDING HVAC CONTROLS REPLACEMENT
WESTERN CAROLINA UNIVERSITY
SCO ID: 22-24466-01A
CODE: 42126 ITEM: 316

DATE	3/2/2023
M&C PROJ. #	07020-0003
DRAWN	SMT
DESIGNED	SMT
CHECKED	WTR
PROJ. MGR.	WTR

SCALE
HORIZONTAL: AS NOTED
VERTICAL: N/A

BID DOCUMENTS

MECHANICAL CONTROLS SCHEMATICS

M302

TYPICAL LAB CONTROL: 1 GENERAL EXHAUST VALVE

NOT TO SCALE

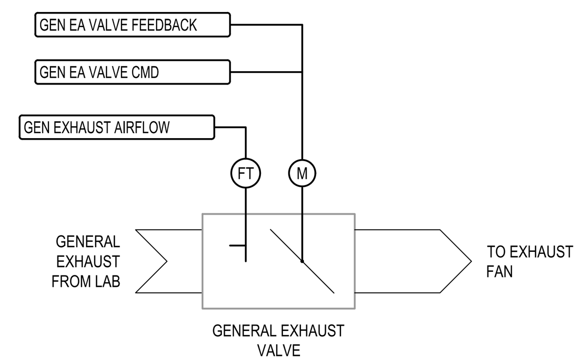

LAB & VALVE LIST

LAB	GENERAL EXHAUST VALVE
118	VV-116
132	VV-127
209	VV-206
218	VV-215
406	VV-437
5 VALVES TOTAL	

SEQUENCE OF OPERATION

GENERAL EXHAUST AIRFLOW CONTROL:
THE GENERAL EXHAUST VALVE SHALL MODULATE TO MAINTAIN ITS AIRFLOW SETPOINT (ADJ.).

VALVE POSITION FEEDBACK:
THE CONTROLLER SHALL MONITOR THE GENERAL EXHAUST VALVE POSITION FEEDBACK.

ALARMS:
THE BAS SHALL GENERATE THE FOLLOWING ALARMS:
- GENERAL EXHAUST AIRFLOW: IF THE GENERAL EXHAUST AIRFLOW DIFFERS FROM SETPOINT BY MORE THAN 25% (ADJ.) FOR 10 MINUTES (ADJ.)

POINTS LIST

POINT DESCRIPTOR	DI	AI	DO	AO	VP	ALARM	TREND	OEM	NOTES
GEN EA VALVE CMD				●			●		
GEN EA VALVE FEEDBACK		●					●		
GEN EXHAUST AIRFLOW		●				●	●		
GEN EXHAUST AIRFLOW SETPOINT					●		●		

(POINT TYPE: DI, AI, DO, AO, VP)

GENERAL NOTES:
1. DIGITAL POINTS SHALL BE TRENDED ON A CHANGE IN VALUE. ANALOG POINTS SHALL BE TRENDED ON A TIME INTERVAL.
2. ALL POINTS SHOWN SHALL BE DISPLAYED ON THE BAS GRAPHICS.
3. THESE LABS DO NOT REQUIRE A DEDICATED LAB CONTROLLER AND EACH OF THESE VALVES CAN BE TIED INTO THE NEAREST LAB CONTROLLER.
4. ALL CONTROL DEVICES SHOWN ON THE SCHEMATIC ARE EXISTING TO REMAIN UNLESS NOTED OTHERWISE.

100% OA AIR HANDLING UNIT CONTROL (AHU-4 & AHU-5)

NOT TO SCALE

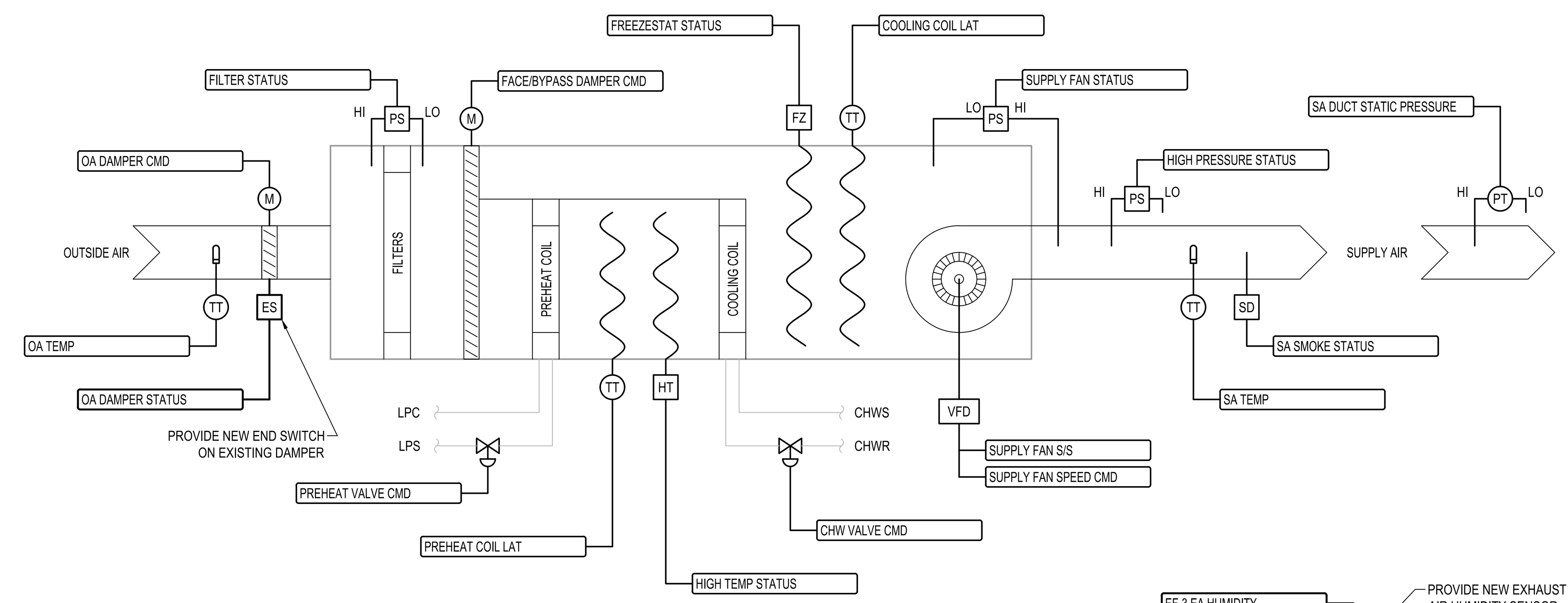

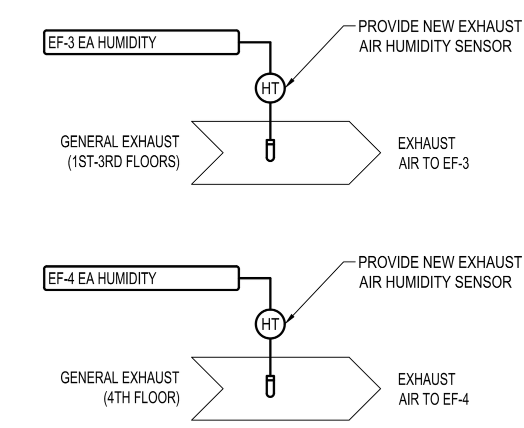

SEQUENCE OF OPERATION

RUN CONDITIONS - CONTINUOUS:
THE UNIT SHALL RUN CONTINUOUSLY UNLESS SHUTDOWN ON SAFETIES.

FREEZE PROTECTION:
UPON TRIPPING OF THE FREEZESTAT, THE UNIT SHALL SHUT DOWN VIA A HARDWIRED CONNECTION TO THE SAFETY CIRCUIT, AND THE BAS SHALL GENERATE AN ALARM.

HIGH STATIC SHUTDOWN:
UPON TRIPPING OF THE HIGH STATIC PRESSURE SWITCH, THE UNIT SHALL SHUT DOWN VIA A HARDWIRED CONNECTION TO THE SAFETY CIRCUIT, AND THE BAS SHALL GENERATE AN ALARM.

SUPPLY AIR SMOKE DETECTION:
UPON SMOKE DETECTION AT THE EXISTING DUCT DETECTOR, THE UNIT SHALL SHUT DOWN VIA AN EXISTING HARDWIRED SIGNAL FROM THE FIRE ALARM SYSTEM. THE BAS SHALL MONITOR THE SMOKE DETECTOR STATUS VIA A SEPARATE RELAY AND GENERATE AN ALARM UPON ACTIVATION OF THE SMOKE DETECTOR.

HIGH TEMPERATURE SHUTDOWN:
UPON TRIPPING OF THE HIGH TEMPERATURE SWITCH, THE UNIT SHALL SHUT DOWN VIA A HARDWIRED CONNECTION TO THE SAFETY CIRCUIT, AND THE BAS SHALL GENERATE AN ALARM.

OUTSIDE AIR DAMPER:
THE OUTSIDE AIR DAMPER SHALL OPEN ANYTIME THE UNIT RUNS AND SHALL CLOSE ANYTIME THE UNIT STOPS. THE SUPPLY FAN SHALL START ONLY AFTER THE DAMPER STATUS HAS PROVEN THE DAMPER IS OPEN. THE OUTSIDE AIR DAMPER SHALL CLOSE 30 SECONDS (ADJ.) AFTER THE SUPPLY FAN STOPS.

ALARMS SHALL BE PROVIDED AS FOLLOWS:
- OUTSIDE AIR DAMPER FAILED CLOSED: COMMANDED OPEN, BUT THE STATUS IS CLOSED.
- OUTSIDE AIR DAMPER FAILED OPEN: COMMANDED CLOSED, BUT THE STATUS IS OPEN.

SUPPLY FAN:
THE SUPPLY FAN SHALL RUN ANYTIME THE UNIT IS COMMANDED TO RUN, UNLESS SHUTDOWN ON SAFETIES.

ALARMS SHALL BE PROVIDED AS FOLLOWS:
- SUPPLY FAN FAILURE: COMMANDED ON, BUT THE STATUS IS OFF.
- SUPPLY FAN IN HAND: COMMANDED OFF, BUT THE STATUS IS ON.

SUPPLY AIR DUCT STATIC PRESSURE CONTROL:
THE CONTROLLER SHALL MEASURE DUCT STATIC PRESSURE AND MODULATE THE SUPPLY FAN VFD SPEED TO MAINTAIN A DUCT STATIC PRESSURE SETPOINT. THE SPEED SHALL NOT DROP BELOW 30% (ADJ.). THE STATIC PRESSURE SETPOINT SHALL BE RESET BASED UPON THE FEEDBACK POSITION OF THE SUPPLY VALVES, WITH A GOAL OF REDUCING STATIC PRESSURE UNTIL AT LEAST ONE SUPPLY VALVE IS NEARLY WIDE OPEN.
- THE INITIAL DUCT STATIC PRESSURE SETPOINT SHALL BE 1.5" (ADJ.).
- IF 0 (ADJ.) SUPPLY VALVES ARE GREATER THAN 90% OPEN (ADJ.), THE SETPOINT SHALL INCREMENTALLY RESET DOWN BY 0.1" (ADJ.) EVERY 5 MINUTES (ADJ.) TO A MINIMUM OF 0.5" (ADJ.).
- IF 1 (ADJ.) SUPPLY VALVES ARE GREATER THAN 90% OPEN (ADJ.), THE SETPOINT SHALL INCREMENTALLY RESET UP BY 0.1" (ADJ.) EVERY 5 MINUTES (ADJ.) TO A MAXIMUM OF 2.0" (ADJ.).

THE FINAL STATIC PRESSURE SETPOINTS SHALL BE DETERMINED BY THE TAB CONTRACTOR. THE MINIMUM STATIC PRESSURE SETPOINT SHALL BE DETERMINED WITH ALL ASSOCIATED ZONES AT MINIMUM AIRFLOW AND THE MAXIMUM STATIC PRESSURE SETPOINT SHALL BE DETERMINED WITH ALL ASSOCIATED ZONES AT MAXIMUM AIRFLOW.

ALARMS SHALL BE PROVIDED AS FOLLOWS:
- HIGH SUPPLY AIR STATIC PRESSURE: IF THE SUPPLY AIR STATIC PRESSURE IS 25% (ADJ.) GREATER THAN SETPOINT FOR A MINIMUM OF 15 MINUTES (ADJ.).
- LOW SUPPLY AIR STATIC PRESSURE: IF THE SUPPLY AIR STATIC PRESSURE IS 25% (ADJ.) LESS THAN SETPOINT FOR A MINIMUM OF 15 MINUTES (ADJ.).

PREHEAT COIL STEAM VALVE:
THE CONTROLLER SHALL MEASURE THE SUPPLY AIR TEMPERATURE AND MODULATE THE PREHEAT COIL STEAM VALVE TO MAINTAIN ITS HEATING SETPOINT OF 55°F (ADJ.). THE PREHEAT SHALL BE ENABLED WHENEVER:
- OUTSIDE AIR TEMPERATURE IS LESS THAN 60°F (ADJ.)
- AND THE SUPPLY AIR TEMPERATURE IS BELOW SETPOINT
- AND THE SUPPLY FAN STATUS IS ON
- AND THE COOLING IS NOT ACTIVE

WHEN THE OUTSIDE AIR TEMPERATURE FALLS BELOW 35°F (ADJ.), THE PREHEAT COIL VALVE SHALL NOT CLOSE BELOW A MINIMUM FREEZE PROTECTION POSITION OF 50% (ADJ.).

FACE/BYPASS DAMPER:
WHEN THE OUTSIDE AIR TEMPERATURE IS BELOW 35°F (ADJ.) AND THE PREHEAT COIL VALVE IS AT ITS MINIMUM FREEZE PROTECTION POSITION, THE FACE/BYPASS DAMPER SHALL MODULATE TO BYPASS THE PREHEAT COIL TO MAINTAIN SUPPLY AIR TEMPERATURE HEATING SETPOINT.

THE SEQUENCE SHALL BE CONFIGURED TO PREVENT THE FACE/BYPASS DAMPER FROM BYPASSING THE PREHEAT COIL WHEN THE PREHEAT COIL VALVE IS OPEN BEYOND ITS MINIMUM FREEZE PROTECTION POSITION.

SUPPLY AIR TEMPERATURE SETPOINT - COOLING:
THE CONTROLLER SHALL MONITOR THE SUPPLY AIR TEMPERATURE AND SHALL MAINTAIN A SUPPLY AIR TEMPERATURE RESET BASED ON ZONE COOLING REQUIREMENTS. THE SUPPLY AIR TEMPERATURE COOLING SETPOINT SHALL BE RESET FOR COOLING BASED ON ZONE COOLING REQUIREMENTS AS FOLLOWS:
- THE INITIAL SUPPLY AIR TEMPERATURE SETPOINT SHALL BE 58°F (ADJ.).
- AS COOLING DEMAND INCREASES, THE SETPOINT SHALL BE INCREMENTALLY RESET DOWN TO A MINIMUM OF 55°F (ADJ.).
- AS COOLING DEMAND DECREASES, THE SETPOINT SHALL INCREMENTALLY RESET UP TO A MAXIMUM OF 68°F (ADJ.).

COOLING COIL VALVE:
THE CONTROLLER SHALL MEASURE THE SUPPLY AIR TEMPERATURE AND MODULATE THE COOLING COIL VALVE TO MAINTAIN ITS COOLING SETPOINT. THE COOLING SHALL BE ENABLED WHENEVER:
- OUTSIDE AIR TEMPERATURE IS GREATER THAN 60°F (ADJ.)
- AND THE SUPPLY FAN STATUS IS ON
- AND THE PREHEAT COIL IS NOT ACTIVE

DEHUMIDIFICATION:
DEHUMIDIFICATION SHALL BE ENABLED WHEN THE EXHAUST AIR RELATIVE HUMIDITY RISES TO 54% (ADJ.) FOR A MINIMUM OF 15 MINUTES (ADJ.) AND DISABLED WHEN IT FALLS BELOW 54% (ADJ.) FOR A MINIMUM OF 15 MINUTES (ADJ.).

WHILE IN DEHUMIDIFICATION MODE, THE SUPPLY AIR TEMPERATURE COOLING SETPOINT SHALL BE CALCULATED USING A LINEAR RESET BLOCK WITH THE UPPER SETPOINT LIMIT UTILIZING THE NORMAL SUPPLY AIR TEMPERATURE COOLING SETPOINT CALCULATION AND THE LOWER SETPOINT LIMIT AT 53°F (ADJ.) WHEN THE EXHAUST AIR RELATIVELY HUMIDITY IS 58% (ADJ.).

ALARMS SHALL BE PROVIDED AS FOLLOWS:
- HIGH EXHAUST AIR RELATIVE HUMIDITY: IF THE EXHAUST AIR RELATIVE HUMIDITY IS GREATER THAN 62% (ADJ.) FOR 15 MINUTES (ADJ.).

SUPPLY AIR TEMPERATURE ALARMS:
ALARMS SHALL BE PROVIDED AS FOLLOWS:
- HIGH SUPPLY AIR TEMPERATURE: IF THE SUPPLY AIR TEMPERATURE IS GREATER THAN 5°F (ADJ.) ABOVE SETPOINT FOR A MINIMUM OF 15 MINUTES (ADJ.).
- LOW SUPPLY AIR TEMPERATURE: IF THE SUPPLY AIR TEMPERATURE IS GREATER THAN 5°F (ADJ.) BELOW SETPOINT FOR A MINIMUM OF 15 MINUTES (ADJ.).

UNIT SHUTDOWN:
WHEN THE UNIT IS SHUTDOWN, THE FOLLOWING SHALL OCCUR:
- THE OUTSIDE AIR DAMPER SHALL CLOSE.
- THE SUPPLY FAN SHALL TURN OFF.
- THE PREHEAT COIL STEAM VALVE SHALL CLOSE UNLESS THE OUTSIDE AIR TEMPERATURE IS LESS THAN 35°F (ADJ.), IN WHICH CASE IT SHALL OPEN TO 20% (ADJ.) FOR FREEZE PROTECTION.
- COOLING COIL VALVE SHALL CLOSE.
- THE FACE/BYPASS DAMPER SHALL FULLY CLOSE TO THE COILS (BYPASSING THE COILS).

FILTER DIFFERENTIAL PRESSURE MONITORING:
UPON TRIPPING OF THE DIFFERENTIAL PRESSURE SWITCH ACROSS THE FILTERS, THE BAS SHALL GENERATE AN ALARM.

MISCELLANEOUS MONITORING:
THE BAS SHALL ALSO MONITOR THE FOLLOWING:
- OUTSIDE AIR TEMPERATURE
- PREHEAT COIL LEAVING AIR TEMPERATURE
- COOLING COIL LEAVING AIR TEMPERATURE

POINTS LIST

POINT DESCRIPTOR	DI	AI	DO	AO	VP	ALARM	TREND	OEM	NOTES
CHW VALVE CMD				●			●		
COOLING COIL LAT		●					●		
EA HUMIDITY SETPOINT					●		●		
EF-3 EA HUMIDITY					●	●	●		NOTE 1
EF-3 EA HUMIDITY					●	●	●		NOTE 2
FACE/BYPASS DAMPER CMD				●			●		
FILTER STATUS	●					●			
FREEZESTAT STATUS	●					●			
HIGH PRESSURE STATUS	●					●			
HIGH TEMP STATUS	●					●			
OA DAMPER CMD				●			●		
OA DAMPER STATUS	●					●	●		
OA TEMP		●					●		
OA TEMP FREEZE PROTECTION SETPOINT					●				
PREHEAT COIL LAT		●					●		
PREHEAT VALVE CMD				●			●		
PREHEAT VALVE FREEZE PROTECTION SETPOINT					●				
SA DUCT STATIC PRESSURE		●				●	●		
SA DUCT STATIC PRESSURE SETPOINT					●		●		
SA SMOKE STATUS	●					●			
SA TEMP		●				●	●		
SA TEMP COOLING SETPOINT					●		●		
SA TEMP HEATING SETPOINT					●		●		
SUPPLY FAN S/S			●				●		
SUPPLY FAN SPEED CMD				●			●		
SUPPLY FAN STATUS	●					●	●		

(POINT TYPE: DI, AI, DO, AO, VP)

GENERAL NOTES:
1. DIGITAL POINTS SHALL BE TRENDED ON A CHANGE IN VALUE. ANALOG POINTS SHALL BE TRENDED ON A TIME INTERVAL.
2. ALL POINTS SHOWN SHALL BE DISPLAYED ON THE BAS GRAPHICS.
3. AHU-4 SERVES THE LAB SPACES ON THE 1ST-3RD FLOORS. AHU-5 SERVES THE LAB SPACES ON THE 4TH FLOOR.
4. ALL CONTROL DEVICES SHOWN ON THE SCHEMATIC ARE EXISTING TO REMAIN UNLESS NOTED OTHERWISE.

KEY NOTES:
1. THE EF-3 EXHAUST AIR HUMIDITY SHALL BE UTILIZED FOR DEHUMIDIFICATION CONTROL FOR AHU-4.
2. THE EF-4 EXHAUST AIR HUMIDITY SHALL BE UTILIZED FOR DEHUMIDIFICATION CONTROL FOR AHU-5.

McKIM & CREED
Venture IV Building, Suite 500
1730 Varsity Drive
Raleigh, North Carolina 27606
Phone: (919) 233-8091, Fax: (919) 233-8031
www.mckimcreed.com

Western Carolina UNIVERSITY

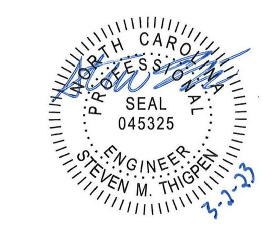

REV	REVISION DESCRIPTION	DATE

STILLWELL BUILDING
HVAC CONTROLS
REPLACEMENT
WESTERN CAROLINA
UNIVERSITY

SCO ID: 22-24466-01A
CODE: 42126 ITEM: 316

DATE	3/2/2023
M&C PROJ. #	07020-0003
DRAWN	SMT
DESIGNED	SMT
CHECKED	WTR
PROJ. MGR.	WTR

SCALE
HORIZONTAL: AS NOTED
VERTICAL: N/A

BID DOCUMENTS

MECHANICAL CONTROLS SCHEMATICS

M303

LAB EXHAUST FAN CONTROL

NOT TO SCALE

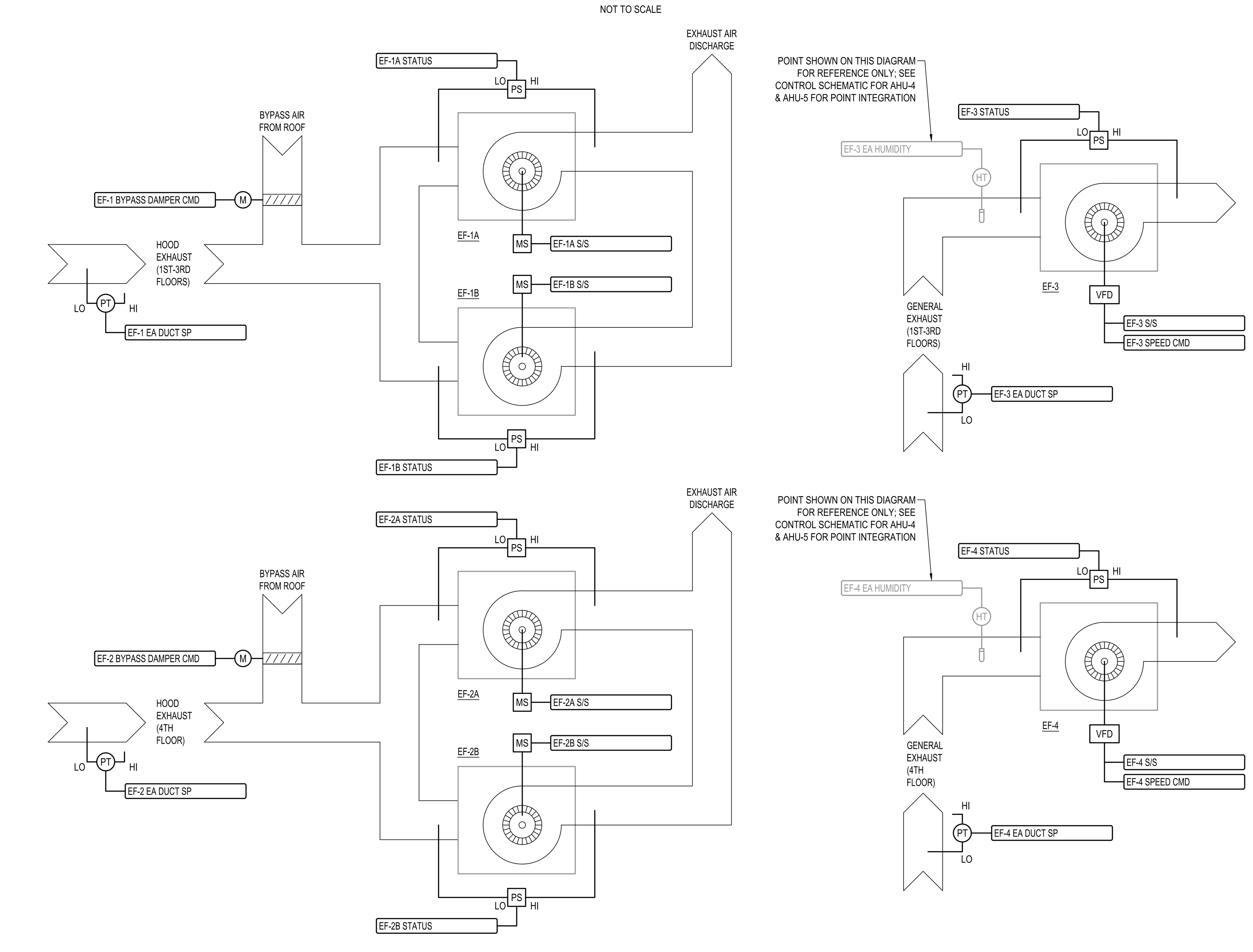

SEQUENCE OF OPERATION: EF-1A/B & EF-2A/B

THE FOLLOWING SEQUENCE IS TYPICAL FOR BOTH EF-1A/B AND EF-2A/B. EF-1A AND EF-1B SHALL OPERATE AS ONE SYSTEM, WITH EF-2A AND EF-2B OPERATING AS A SEPARATE SYSTEM.

EXHAUST FAN LEAD/LAG CONTROL:
THE EXHAUST FANS SHALL RUN CONTINUOUSLY, UNLESS SHUT DOWN ON SAFETIES.

THE TWO EXHAUST FANS SHALL OPERATE IN A LEAD/STANDBY FASHION.
- THE LEAD FAN SHALL RUN FIRST.
- ON FAILURE OF THE LEAD FAN, THE STANDBY FAN SHALL RUN AND THE LEAD FAN SHALL TURN OFF.

THE DESIGNATED LEAD FAN SHALL ROTATE UPON ONE OF THE FOLLOWING CONDITIONS (USER SELECTABLE):
- MANUALLY THROUGH A SOFTWARE SWITCH
- IF FAN RUNTIME (ADJ.) IS EXCEEDED
- BASED ON A DEFINED SCHEDULE, SUCH AS WEEKLY, MONTHLY, ETC. (ADJ.)

ALARMS SHALL BE PROVIDED AS FOLLOWS:
- EXHAUST FAN FAILURE: COMMANDED ON, BUT THE STATUS IS OFF
- EXHAUST FAN IN HAND: COMMANDED OFF, BUT THE STATUS IS ON
- RUNTIME EXCEEDED: STATUS RUNTIME EXCEEDS A USER DEFINABLE LIMIT

EXHAUST AIR DUCT STATIC PRESSURE CONTROL:
THE CONTROLLER SHALL MEASURE EXHAUST DUCT STATIC PRESSURE AND MODULATE THE BYPASS DAMPER TO MAINTAIN A DUCT STATIC PRESSURE SETPOINT. THE STATIC PRESSURE SETPOINT SHALL BE RESET BASED UPON THE FEEDBACK POSITION OF THE ASSOCIATED HOOD EXHAUST VALVES, WITH A GOAL OF REDUCING STATIC PRESSURE UNTIL AT LEAST ONE EXHAUST VALVE IS NEARLY WIDE OPEN.
- THE INITIAL DUCT STATIC PRESSURE SETPOINT SHALL BE 1.5" (ADJ.).
- IF 0 (ADJ.) EXHAUST VALVES ARE GREATER THAN 90% OPEN (ADJ.), THE SETPOINT SHALL INCREMENTALLY RESET DOWN BY 0.1" (ADJ.) EVERY 5 MINUTES (ADJ.) TO A MINIMUM OF 0.5" (ADJ.).
- IF 1 (ADJ.) EXHAUST VALVES ARE GREATER THAN 90% OPEN (ADJ.), THE SETPOINT SHALL INCREMENTALLY RESET UP BY 0.1" (ADJ.) EVERY 5 MINUTES (ADJ.) TO A MAXIMUM OF 2.0" (ADJ.).

THE FINAL STATIC PRESSURE SETPOINTS SHALL BE DETERMINED BY THE TAB CONTRACTOR. THE MINIMUM STATIC PRESSURE SETPOINT SHALL BE DETERMINED WITH ALL ASSOCIATED ZONES AT MINIMUM AIRFLOW AND THE MAXIMUM STATIC PRESSURE SETPOINT SHALL BE DETERMINED WITH ALL ASSOCIATED ZONES AT MAXIMUM AIRFLOW.

ALARMS SHALL BE PROVIDED AS FOLLOWS:
- HIGH EXHAUST AIR STATIC PRESSURE: IF THE EXHAUST AIR STATIC PRESSURE IS 25% (ADJ.) GREATER THAN SETPOINT FOR A MINIMUM OF 15 MINUTES (ADJ.).
- LOW EXHAUST AIR STATIC PRESSURE: IF THE SUPPLY AIR STATIC PRESSURE IS 25% (ADJ.) LESS THAN SETPOINT FOR A MINIMUM OF 15 MINUTES (ADJ.).

SEQUENCE OF OPERATION: EF-3 & EF-4

THE FOLLOWING SEQUENCE IS TYPICAL FOR BOTH EF-3 AND EF-4.

RUN CONDITIONS - CONTINUOUS:
THE EXHAUST FAN SHALL RUN CONTINUOUSLY, UNLESS SHUTDOWN ON SAFETIES.

ALARMS SHALL BE PROVIDED AS FOLLOWS:
- EXHAUST FAN FAILURE: COMMANDED ON, BUT THE STATUS IS OFF.
- EXHAUST FAN IN HAND: COMMANDED OFF, BUT THE STATUS IS ON.

EXHAUST AIR DUCT STATIC PRESSURE CONTROL:
THE CONTROLLER SHALL MEASURE EXHAUST DUCT STATIC PRESSURE AND MODULATE THE EXHAUST FAN VFD SPEED TO MAINTAIN A DUCT STATIC PRESSURE SETPOINT. THE SPEED SHALL NOT DROP BELOW 30% (ADJ.). THE STATIC PRESSURE SETPOINT SHALL BE RESET BASED UPON THE FEEDBACK POSITION OF THE ASSOCIATED GENERAL EXHAUST VALVES, WITH A GOAL OF REDUCING STATIC PRESSURE UNTIL AT LEAST ONE EXHAUST VALVE IS NEARLY WIDE OPEN.
- THE INITIAL DUCT STATIC PRESSURE SETPOINT SHALL BE 1.5" (ADJ.).
- IF 0 (ADJ.) EXHAUST VALVES ARE GREATER THAN 90% OPEN (ADJ.), THE SETPOINT SHALL INCREMENTALLY RESET DOWN BY 0.1" (ADJ.) EVERY 5 MINUTES (ADJ.) TO A MINIMUM OF 0.5" (ADJ.).
- IF 1 (ADJ.) EXHAUST VALVES ARE GREATER THAN 90% OPEN (ADJ.), THE SETPOINT SHALL INCREMENTALLY RESET UP BY 0.1" (ADJ.) EVERY 5 MINUTES (ADJ.) TO A MAXIMUM OF 2.0" (ADJ.).

THE FINAL STATIC PRESSURE SETPOINTS SHALL BE DETERMINED BY THE TAB CONTRACTOR. THE MINIMUM STATIC PRESSURE SETPOINT SHALL BE DETERMINED WITH ALL ASSOCIATED ZONES AT MINIMUM AIRFLOW AND THE MAXIMUM STATIC PRESSURE SETPOINT SHALL BE DETERMINED WITH ALL ASSOCIATED ZONES AT MAXIMUM AIRFLOW.

ALARMS SHALL BE PROVIDED AS FOLLOWS:
- HIGH EXHAUST AIR STATIC PRESSURE: IF THE EXHAUST AIR STATIC PRESSURE IS 25% (ADJ.) GREATER THAN SETPOINT FOR A MINIMUM OF 15 MINUTES (ADJ.).
- LOW EXHAUST AIR STATIC PRESSURE: IF THE SUPPLY AIR STATIC PRESSURE IS 25% (ADJ.) LESS THAN SETPOINT FOR A MINIMUM OF 15 MINUTES (ADJ.).

POINTS LIST

POINT DESCRIPTOR	DI	AI	DO	AO	VP	ALARM	TREND	OEM	NOTES
EF-1 BYPASS DAMPER CMD				●			●		
EF-1 EA DUCT SP		●				●	●		
EF-1 EA DUCT SP SETPOINT					●		●		
EF-1 LEAD FAN					●		●		
EF-1A RUNTIME					●		●		
EF-1A S/S			●				●		
EF-1A STATUS	●					●	●		
EF-1B RUNTIME					●		●		
EF-1B S/S			●				●		
EF-1B STATUS	●					●	●		
EF-2 BYPASS DAMPER CMD				●			●		
EF-2 EA DUCT SP		●				●	●		
EF-2 EA DUCT SP SETPOINT					●		●		
EF-2 LEAD FAN					●		●		
EF-2A RUNTIME					●		●		
EF-2A S/S			●				●		
EF-2A STATUS	●					●	●		
EF-2B RUNTIME					●		●		
EF-2B S/S			●				●		
EF-2B STATUS	●					●	●		
EF-3 EA DUCT SP		●				●	●		
EF-3 EA DUCT SP SETPOINT					●		●		
EF-3 EA HUMIDITY					●				NOTE 1
EF-3 S/S			●				●		
EF-3 SPEED CMD				●			●		
EF-3 STATUS	●					●	●		
EF-4 EA DUCT SP		●				●	●		
EF-4 EA DUCT SP SETPOINT					●		●		
EF-4 EA HUMIDITY					●				NOTE 1
EF-4 S/S			●				●		
EF-4 SPEED CMD				●			●		
EF-4 STATUS	●					●	●		

GENERAL NOTES:
1. DIGITAL POINTS SHALL BE TRENDED ON A CHANGE IN VALUE. ANALOG POINTS SHALL BE TRENDED ON A TIME INTERVAL.
2. ALL POINTS SHOWN SHALL BE DISPLAYED ON THE BAS GRAPHICS.
3. POINTS FOR EF-1A, EF-1B, AND EF-3 SHALL BE CONNECTED TO THE AHU-4 CONTROLLER.
4. POINTS FOR EF-2A, EF-2B, AND EF-4 SHALL BE CONNECTED TO THE AHU-5 CONTROLLER.
5. ALL CONTROL DEVICES SHOWN ON THE SCHEMATIC ARE EXISTING TO REMAIN UNLESS NOTED OTHERWISE.

KEY NOTES:
1. THIS POINT SHALL BE CONNECTED TO THE ASSOCIATED AHU CONTROLLER FOR DEHUMIDIFICATION CONTROL. IT SHALL BE SHOWN ON THE EF GRAPHIC FOR REFERENCE ONLY.

AHU-6 CONTROL

NOT TO SCALE

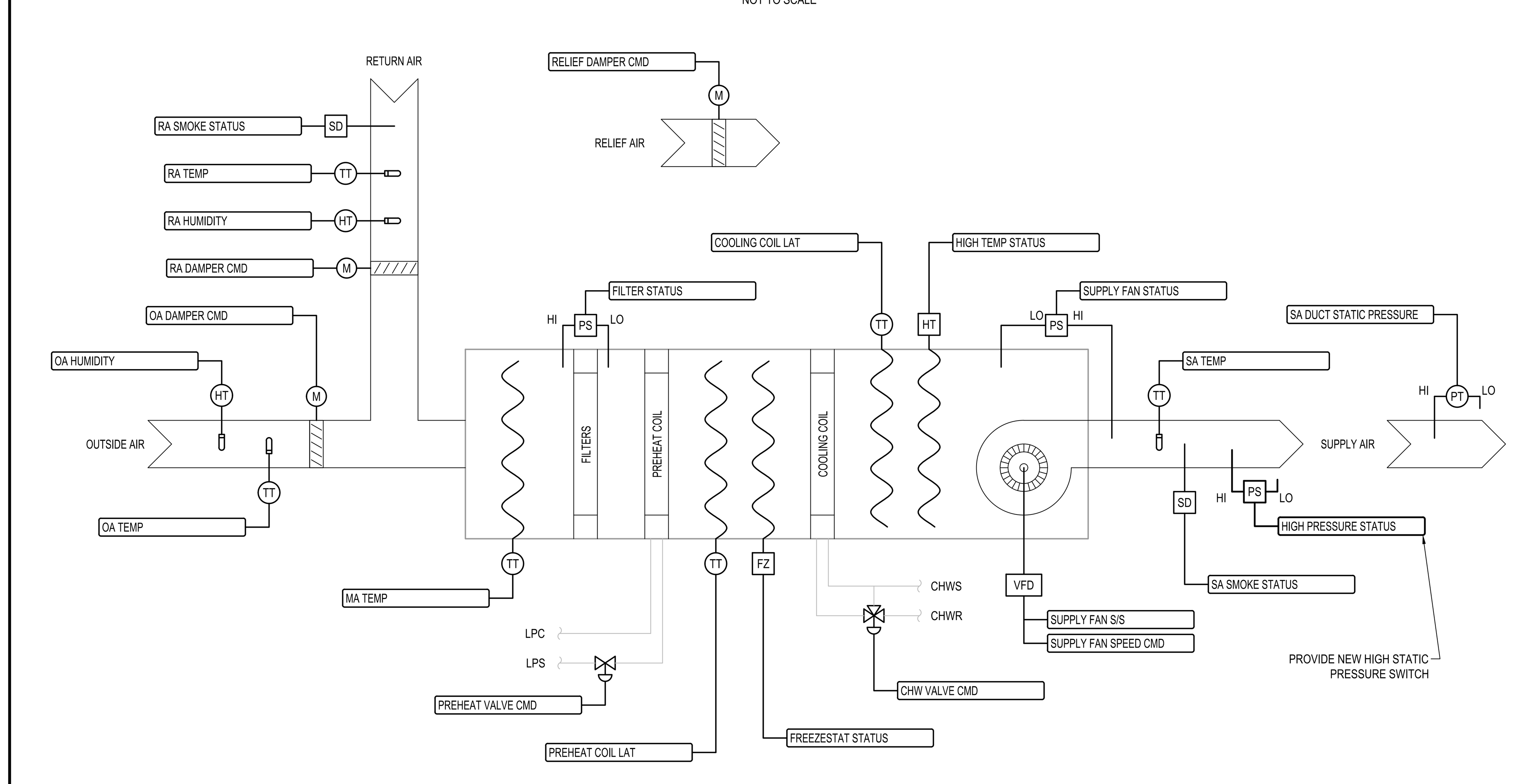

SEQUENCE OF OPERATION

RUN CONDITIONS - SCHEDULED:
THE UNIT SHALL WHENEVER:
- THE SYSTEM IS IN OCCUPIED MODE BASED UPON A USER DEFINABLE TIME SCHEDULE.
- OR A MINIMUM OF 2 (ADJ.) UNOCCUPIED ZONES REQUEST HEATING OR COOLING.

THE INITIAL OCCUPIED SCHEDULE SHALL BE MONDAY - FRIDAY, 7AM - 8PM (ADJ.).

FREEZE PROTECTION:
UPON TRIPPING OF THE FREEZESTAT, THE UNIT SHALL SHUT DOWN VIA A HARDWIRED CONNECTION TO THE SAFETY CIRCUIT, AND THE BAS SHALL GENERATE AN ALARM.

HIGH STATIC SHUTDOWN:
UPON TRIPPING OF THE HIGH STATIC PRESSURE SWITCH, THE UNIT SHALL SHUT DOWN VIA A HARDWIRED CONNECTION TO THE SAFETY CIRCUIT, AND THE BAS SHALL GENERATE AN ALARM.

RETURN AIR SMOKE DETECTION:
UPON SMOKE DETECTION AT THE EXISTING DUCT DETECTOR, THE UNIT SHALL SHUT DOWN VIA AN EXISTING HARDWIRED SIGNAL FROM THE FIRE ALARM SYSTEM. THE BAS SHALL MONITOR THE SMOKE DETECTOR STATUS VIA A SEPARATE RELAY AND GENERATE AN ALARM UPON ACTIVATION OF THE SMOKE DETECTOR.

SUPPLY AIR SMOKE DETECTION:
UPON SMOKE DETECTION AT THE EXISTING DUCT DETECTOR, THE UNIT SHALL SHUT DOWN VIA AN EXISTING HARDWIRED SIGNAL FROM THE FIRE ALARM SYSTEM. THE BAS SHALL MONITOR THE SMOKE DETECTOR STATUS VIA A SEPARATE RELAY AND GENERATE AN ALARM UPON ACTIVATION OF THE SMOKE DETECTOR.

HIGH TEMPERATURE SHUTDOWN:
UPON TRIPPING OF THE HIGH TEMPERATURE SWITCH, THE UNIT SHALL SHUT DOWN VIA A HARDWIRED CONNECTION TO THE SAFETY CIRCUIT, AND THE BAS SHALL GENERATE AN ALARM.

AHU OPTIMAL START:
THE UNIT SHALL START PRIOR TO SCHEDULED OCCUPANCY BASED ON THE TIME NECESSARY FOR THE ZONES TO REACH THEIR OCCUPIED SETPOINTS. THE START TIME SHALL AUTOMATICALLY ADJUST BASED ON CHANGES IN OUTSIDE AIR TEMPERATURE AND ZONE TEMPERATURES.

SUPPLY FAN:
THE SUPPLY FAN SHALL RUN ANYTIME THE UNIT IS COMMANDED TO RUN, UNLESS SHUTDOWN ON SAFETIES. TO PREVENT SHORT CYCLING, THE SUPPLY FAN SHALL HAVE A MINIMUM RUNTIME OF 10 MINUTES (ADJ.).

ALARMS SHALL BE PROVIDED AS FOLLOWS:
- SUPPLY FAN FAILURE: COMMANDED ON, BUT THE STATUS IS OFF.
- SUPPLY FAN IN HAND: COMMANDED OFF, BUT THE STATUS IS ON.

SUPPLY AIR DUCT STATIC PRESSURE CONTROL:
THE CONTROLLER SHALL MEASURE DUCT STATIC PRESSURE AND MODULATE THE SUPPLY FAN VFD SPEED TO MAINTAIN A DUCT STATIC PRESSURE SETPOINT. THE SPEED SHALL NOT DROP BELOW 30% (ADJ.). THE STATIC PRESSURE SETPOINT SHALL BE RESET BASED UPON THE POSITION OF THE ZONE DAMPERS, WITH A GOAL OF REDUCING STATIC PRESSURE UNTIL AT LEAST ONE ZONE DAMPER IS NEARLY WIDE OPEN.
- THE INITIAL DUCT STATIC PRESSURE SETPOINT SHALL BE 1.5" (ADJ.).
- IF 0 (ADJ.) ZONE DAMPERS ARE GREATER THAN 90% OPEN (ADJ.), THE SETPOINT SHALL INCREMENTALLY RESET DOWN BY 0.1" (ADJ.) EVERY 15 MINUTES (ADJ.) TO A MINIMUM OF 0.5" (ADJ.).
- IF 1 (ADJ.) ZONE DAMPERS ARE GREATER THAN 90% OPEN (ADJ.), THE SETPOINT SHALL INCREMENTALLY RESET UP BY 0.1" (ADJ.) EVERY 15 MINUTES (ADJ.) TO A MAXIMUM OF 2.0" (ADJ.).

THE FINAL STATIC PRESSURE SETPOINTS SHALL BE DETERMINED BY THE TAB CONTRACTOR. THE MINIMUM STATIC PRESSURE SETPOINT SHALL BE DETERMINED WITH ALL ASSOCIATED ZONES AT MINIMUM AIRFLOW AND THE MAXIMUM STATIC PRESSURE SETPOINT SHALL BE DETERMINED WITH ALL ASSOCIATED ZONES AT MAXIMUM AIRFLOW.

ALARMS SHALL BE PROVIDED AS FOLLOWS:
- HIGH SUPPLY AIR STATIC PRESSURE: IF THE SUPPLY AIR STATIC PRESSURE IS 25% (ADJ.) GREATER THAN SETPOINT FOR A MINIMUM OF 15 MINUTES (ADJ.).
- LOW SUPPLY AIR STATIC PRESSURE: IF THE SUPPLY AIR STATIC PRESSURE IS 25% (ADJ.) LESS THAN SETPOINT FOR A MINIMUM OF 15 MINUTES (ADJ.).

PREHEAT COIL STEAM VALVE:
THE CONTROLLER SHALL MEASURE THE PREHEAT COIL LEAVING AIR TEMPERATURE AND MODULATE THE PREHEAT COIL STEAM VALVE TO MAINTAIN ITS HEATING SETPOINT OF 52°F (ADJ.). THE PREHEAT SHALL BE ENABLED WHENEVER:
- OUTSIDE AIR TEMPERATURE IS LESS THAN 60°F (ADJ.)
- AND THE ECONOMIZER IS DISABLED
- AND THE SUPPLY FAN STATUS IS ON
- AND THE COOLING IS NOT ACTIVE

THE PREHEAT COIL STEAM VALVE SHALL OPEN FOR FREEZE PROTECTION WHENEVER:
- MIXED AIR TEMPERATURE DROPS FROM 40°F (ADJ.) TO 35°F (ADJ.)
- OR THE FREEZESTAT IS ON

SUPPLY AIR TEMPERATURE SETPOINT - COOLING:
THE CONTROLLER SHALL MONITOR THE SUPPLY AIR TEMPERATURE AND SHALL MAINTAIN A SUPPLY AIR TEMPERATURE RESET BASED ON ZONE COOLING REQUIREMENTS. THE SUPPLY AIR TEMPERATURE COOLING SETPOINT SHALL BE RESET FOR COOLING BASED ON ZONE COOLING REQUIREMENTS AS FOLLOWS:
- THE INITIAL SUPPLY AIR TEMPERATURE SETPOINT SHALL BE 58°F (ADJ.).
- AS COOLING DEMAND INCREASES, THE SETPOINT SHALL BE INCREMENTALLY RESET DOWN TO A MINIMUM OF 55°F (ADJ.).
- AS COOLING DEMAND DECREASES, THE SETPOINT SHALL INCREMENTALLY RESET UP TO A MAXIMUM OF 68°F (ADJ.).

ALARMS SHALL BE PROVIDED AS FOLLOWS:
- HIGH SUPPLY AIR TEMPERATURE: IF THE SUPPLY AIR TEMPERATURE IS GREATER THAN 5°F (ADJ.) ABOVE SETPOINT FOR A MINIMUM OF 15 MINUTES (ADJ.).
- LOW SUPPLY AIR TEMPERATURE: IF THE SUPPLY AIR TEMPERATURE IS GREATER THAN 5°F (ADJ.) BELOW SETPOINT FOR A MINIMUM OF 15 MINUTES (ADJ.).

COOLING COIL VALVE:
THE CONTROLLER SHALL MEASURE THE SUPPLY AIR TEMPERATURE AND MODULATE THE COOLING COIL VALVE TO MAINTAIN ITS COOLING SETPOINT. THE COOLING SHALL BE ENABLED WHENEVER:
- OUTSIDE AIR TEMPERATURE IS GREATER THAN 60°F (ADJ.)
- AND THE ECONOMIZER IS DISABLED OR 100% OPEN (ADJ.) FOR A MINIMUM OF 5 MINUTES (ADJ.)
- AND THE SUPPLY FAN STATUS IS ON
- AND THE PREHEAT COIL IS NOT ACTIVE

THE COOLING COIL VALVE SHALL OPEN TO 50% (ADJ.) WHENEVER THE FREEZESTAT IS ON.

ECONOMIZER:
THE CONTROLLER SHALL MEASURE THE MIXED AIR TEMPERATURE AND MODULATE THE ECONOMIZER DAMPERS IN SEQUENCE TO MAINTAIN A MIXED AIR TEMPERATURE SETPOINT OF 2°F (ADJ.) LESS THAN THE ACTIVE SUPPLY AIR TEMPERATURE SETPOINT. THE OUTSIDE AIR DAMPER SHALL MAINTAIN A MINIMUM POSITION (ADJ.) WHENEVER OCCUPIED.

THE ECONOMIZER SHALL BE ENABLED WHENEVER:
- OUTSIDE AIR TEMPERATURE IS LESS THAN 68°F (ADJ.)
- AND THE OUTSIDE AIR ENTHALPY IS LESS THAN 27 BTU/LB (ADJ.)
- AND THE OUTSIDE AIR ENTHALPY IS LESS THAN THE RETURN AIR ENTHALPY
- AND THE SUPPLY FAN STATUS IS ON

THE ECONOMIZER SHALL CLOSE WHENEVER:
- MIXED AIR TEMPERATURE DROPS FROM 45°F (ADJ.) TO 40°F (ADJ.)
- OR THE FREEZESTAT IS ON
- OR ON LOSS OF SUPPLY FAN STATUS

WHEN THE UNIT IS OFF OR IS IN UNOCCUPIED MODE, THE OUTSIDE AIR AND RELIEF AIR DAMPERS SHALL CLOSE AND THE RETURN AIR DAMPER SHALL OPEN. IF OPTIMAL START UP IS AVAILABLE, THE OUTSIDE AIR DAMPER AND RELIEF AIR DAMPERS SHALL REMAIN CLOSED UNLESS ECONOMIZER OPERATION IS AVAILABLE.

THE CONTROLLER SHALL TRACK THE TOTAL ECONOMIZER HOURS OF OPERATION AND DISPLAY THIS ON THE GRAPHICS.

ALARMS SHALL BE PROVIDED AS FOLLOWS:
- HIGH MIXED AIR TEMPERATURE: IF THE MIXED AIR TEMPERATURE IS 5°F (ADJ.) GREATER THAN SETPOINT FOR A MINIMUM OF 15 MINUTES (ADJ.).
- LOW MIXED AIR TEMPERATURE: IF THE MIXED AIR TEMPERATURE IS 5°F (ADJ.) LESS THAN SETPOINT FOR A MINIMUM OF 15 MINUTES (ADJ.).

MINIMUM OUTSIDE AIR VENTILATION - RESET BASED ON FAN SPEED:
THE OUTSIDE AIR DAMPER SHALL MAINTAIN A MINIMUM POSITION (ADJ.) DURING OCCUPIED HOURS TO PROVIDE THE ORIGINAL DESIGN VENTILATION AIRFLOW OF 2,350 CFM. THE DAMPER POSITION SHALL BE RESET LINEARLY BASED ON FAN SPEED IN ORDER TO MAINTAIN THE MINIMUM OUTSIDE AIRFLOW. THE MINIMUM AND MAXIMUM OUTSIDE AIR DAMPER POSITIONS FOR MINIMUM VENTILATION SHALL BE DETERMINED BY THE TAB CONTRACTOR AT THE MAXIMUM AND MINIMUM FAN SPEEDS RESPECTIVELY.

RELIEF AIR DAMPER:
THE RELIEF AIR DAMPER SHALL REMAIN CLOSED UNLESS THE UNIT IS IN ECONOMIZER OPERATION, IN WHICH CASE IT SHALL MODULATE OPEN AS DESCRIBED IN THE ECONOMIZER SEQUENCE.

DEHUMIDIFICATION:
DEHUMIDIFICATION SHALL BE ENABLED WHEN THE RETURN AIR RELATIVE HUMIDITY RISES TO 54% (ADJ.) FOR A MINIMUM OF 15 MINUTES (ADJ.) AND DISABLED WHEN IT FALLS BELOW 54% (ADJ.) FOR A MINIMUM OF 15 MINUTES (ADJ.).

WHILE IN DEHUMIDIFICATION MODE, THE SUPPLY AIR TEMPERATURE SETPOINT SHALL BE CALCULATED USING A LINEAR RESET BLOCK WITH THE UPPER SETPOINT LIMIT UTILIZING THE NORMAL SUPPLY AIR TEMPERATURE SETPOINT CALCULATION AND THE LOWER SETPOINT LIMIT AT 53°F (ADJ.) WHEN THE RETURN AIR RELATIVELY HUMIDITY IS 58% (ADJ.).

ALARMS SHALL BE PROVIDED AS FOLLOWS:
- HIGH RETURN AIR RELATIVE HUMIDITY: IF THE RETURN AIR RELATIVE HUMIDITY IS GREATER THAN 62% (ADJ.) FOR 15 MINUTES (ADJ.).

FILTER DIFFERENTIAL PRESSURE MONITORING:
UPON TRIPPING OF THE DIFFERENTIAL PRESSURE SWITCH ACROSS THE FILTERS, THE BAS SHALL GENERATE AN ALARM.

MISCELLANEOUS MONITORING:
THE BAS SHALL ALSO MONITOR THE FOLLOWING:
- COOLING COIL LEAVING AIR TEMPERATURE

POINTS LIST

POINT DESCRIPTOR	DI	AI	DO	AO	VP	ALARM	TREND	OEM	NOTES
CHW VALVE CMD				●			●		
COOLING COIL LAT		●					●		
ECONOMIZER HOURS					●		●		
FILTER STATUS	●					●			
FREEZESTAT STATUS	●					●			
HIGH PRESSURE STATUS	●					●			
HIGH TEMP STATUS	●					●			
MA TEMP		●				●	●		
MA TEMP SETPOINT					●		●		
OA DAMPER CMD				●			●		
OA DAMPER MIN POSITION					●		●		
OA ENTHALPY					●		●		
OA HUMIDITY		●					●		
OA TEMP		●					●		
OCC STATUS					●		●		
PREHEAT COIL LAT		●					●		
PREHEAT COIL LAT SETPOINT					●		●		
PREHEAT VALVE CMD				●			●		
RA DAMPER CMD				●			●		
RA ENTHALPY					●		●		
RA HUMIDITY		●				●	●		
RA SMOKE STATUS	●					●			
RA TEMP		●					●		
RELIEF DAMPER CMD				●			●		
SA DUCT STATIC PRESSURE		●				●	●		
SA DUCT STATIC PRESSURE SETPOINT					●		●		
SA SMOKE STATUS	●					●			
SA TEMP		●				●	●		
SA TEMP SETPOINT					●		●		
SUPPLY FAN S/S			●				●		
SUPPLY FAN SPEED CMD				●			●		
SUPPLY FAN STATUS	●					●	●		

GENERAL NOTES:
1. DIGITAL POINTS SHALL BE TRENDED ON A CHANGE IN VALUE. ANALOG POINTS SHALL BE TRENDED ON A TIME INTERVAL.
2. ALL POINTS SHOWN SHALL BE DISPLAYED ON THE BAS GRAPHICS.
3. ALL CONTROL DEVICES SHOWN ON THE SCHEMATIC ARE EXISTING TO REMAIN UNLESS NOTED OTHERWISE.

McKIM & CREED
Venture IV Building, Suite 500
1730 Varsity Drive
Raleigh, North Carolina 27606
Phone: (919)233-8091, Fax: (919) 233-8031
www.mckimcreed.com

Western Carolina UNIVERSITY

NORTH CAROLINA PROFESSIONAL SEAL 045325 ENGINEER STEVEN M. THIGPEN 3-1-23

REV	REVISION DESCRIPTION	DATE

STILLWELL BUILDING HVAC CONTROLS REPLACEMENT WESTERN CAROLINA UNIVERSITY

SCO ID: 22-24466-01A
CODE: 42126 ITEM: 316

DATE	3/2/2023
M&C PROJ. #	07020-0003
DRAWN	SMT
DESIGNED	SMT
CHECKED	WTR
PROJ. MGR.	WTR

SCALE
HORIZONTAL: AS NOTED
VERTICAL: N/A

BID DOCUMENTS

MECHANICAL CONTROLS SCHEMATICS

M304

SERIES FAN POWERED TERMINAL UNIT CONTROL

NOT TO SCALE

ALTERNATE #2: ALL WORK ASSOCIATED WITH THE SERIES FAN POWERED TERMINAL UNITS SHALL BE INCLUDED IN ALTERNATE #2

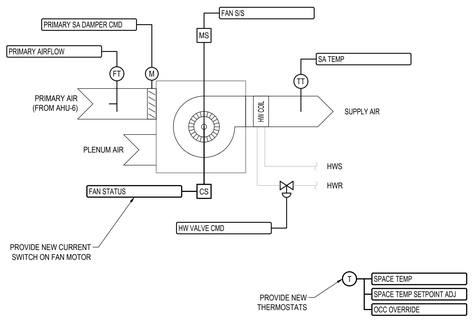

SEQUENCE OF OPERATION

RUN CONDITIONS - SCHEDULED:
THE UNIT SHALL RUN ACCORDING TO A USER DEFINABLE OCCUPANCY SCHEDULE. THE INITIAL OCCUPANCY SCHEDULE SHALL BE MONDAY - FRIDAY, 7AM - 8PM (ADJ.).

IN OCCUPIED MODE, THE UNIT SHALL MAINTAIN:
- A 76°F (ADJ.) COOLING SETPOINT
- A 70°F (ADJ.) HEATING SETPOINT

IN UNOCCUPIED MODE, THE UNIT SHALL MAINTAIN:
- A 78°F (ADJ.) COOLING SETPOINT
- A 65°F (ADJ.) HEATING SETPOINT

ALARMS SHALL BE PROVIDED AS FOLLOWS:
- HIGH SPACE TEMPERATURE: IF THE SPACE TEMPERATURE IS GREATER THAN THE COOLING SETPOINT BY 4°F (ADJ.) FOR 30 MINUTES (ADJ.)
- LOW SPACE TEMPERATURE: IF THE SPACE TEMPERATURE IS LESS THAN THE HEATING SETPOINT BY 4°F (ADJ.) FOR 30 MINUTES (ADJ.)

ZONE UNOCCUPIED OVERRIDE:
A TIMED LOCAL OVERRIDE CONTROL SHALL ALLOW AN OCCUPANT TO OVERRIDE THE SCHEDULE AND PLACE THE UNIT INTO OCCUPIED MODE FOR 90 MINUTES (ADJ.). AT THE EXPIRATION OF THIS TIME, THE UNIT SHALL AUTOMATICALLY RETURN TO THE SCHEDULE.

ZONE SETPOINT ADJUST:
THE OCCUPANT SHALL BE ABLE TO ADJUST THE SPACE TEMPERATURE HEATING AND COOLING SETPOINTS AT THE SPACE SENSOR BY +/- 3°F (ADJ.) SO AT TO MAINTAIN A CONSTANT DEADBAND (ADJ.) BETWEEN HEATING AND COOLING SETPOINTS.

ZONE OPTIMAL START:
THE CONTROLLER SHALL USE AN OPTIMAL START ALGORITHM FOR MORNING START-UP. THIS ALGORITHM SHALL MINIMIZE THE UNOCCUPIED WARM-UP OR COOL-DOWN PERIOD WHILE STILL ACHIEVING COMFORT CONDITIONS BY THE START OF SCHEDULED OCCUPIED PERIOD.

FAN CONTROL - SERIES:
THE FAN SHALL RUN CONTINUOUSLY ANYTIME:
- THE UNIT IS IN OCCUPIED MODE
- THE UNIT IS IN UNOCCUPIED COOLING MODE AND THE ASSOCIATED AHU SUPPLY FAN IS ON.
- THE UNIT IS IN UNOCCUPIED HEATING MODE.

OTHERWISE, THE FAN SHALL TURN OFF WHEN THE UNIT IS IN UNOCCUPIED MODE.

TO PREVENT SHORT CYCLING, THE FAN SHALL HAVE A MINIMUM RUNTIME OF 5 MINUTES (ADJ.). THE PRIMARY AIR DAMPER SHALL CLOSE COMPLETELY BEFORE THE FAN STARTS TO PREVENT AIR FROM THE AHU FROM CAUSING THE FAN TO SPIN BACKWARD. THE PRIMARY AIR DAMPER SHALL RETURN TO AUTOMATIC CONTROL AFTER THE FAN STARTS.

ALARMS SHALL BE PROVIDED AS FOLLOWS:
- FAN FAILURE: COMMANDED ON, BUT THE STATUS IS OFF.
- FAN IN HAND: COMMANDED OFF, BUT THE STATUS IS ON.

PRIMARY AIRFLOW CONTROL:
THE UNIT SHALL MAINTAIN SPACE TEMPERATURE SETPOINTS BY CONTROLLING THE PRIMARY AIRFLOW THROUGH ONE OF THE FOLLOWING:

OCCUPIED MODE:
- AS THE SPACE TEMPERATURE RISES ABOVE ITS COOLING SETPOINT, THE PRIMARY AIR DAMPER SHALL MODULATE OPEN BETWEEN THE MINIMUM OCCUPIED AIRFLOW (ADJ.) AND THE MAXIMUM COOLING AIRFLOW (ADJ.) UNTIL THE SPACE IS SATISFIED.
- AS THE SPACE TEMPERATURE FALLS BELOW ITS COOLING SETPOINT, THE PRIMARY AIR DAMPER SHALL MODULATE CLOSED BETWEEN THE MAXIMUM COOLING AIRFLOW (ADJ.) AND THE MINIMUM OCCUPIED AIRFLOW (ADJ.).
- WHEN THE SPACE TEMPERATURE FALLS BELOW ITS HEATING SETPOINT, THE CONTROLLER SHALL ENABLE HEATING AND THE PRIMARY AIR DAMPER SHALL MAINTAIN THE MINIMUM OCCUPIED AIRFLOW (ADJ.).

UNOCCUPIED MODE:
- WHEN THE SPACE IS UNOCCUPIED. THE PRIMARY AIR DAMPER SHALL CLOSE.
- WHEN THE SPACE TEMPERATURE IS GREATER THAN ITS UNOCCUPIED COOLING SETPOINT, THE TERMINAL UNIT SHALL SEND A COOLING REQUEST TO THE ASSOCIATE AIR HANDLING UNIT. UPON START OF THE AIR HANDLING UNIT SUPPLY FAN, THE PRIMARY AIR DAMPER SHALL MODULATE OPEN TOWARDS THE MAXIMUM COOLING AIRFLOW (ADJ.) UNTIL THE ZONE IS SATISFIED.
- WHEN THE SPACE TEMPERATURE IS LESS THAN ITS UNOCCUPIED HEATING SETPOINT, THE CONTROLLER SHALL ENABLE HEATING AND THE PRIMARY AIR DAMPER SHALL REMAIN CLOSED.

REHEATING COIL VALVE:
WHEN THE SPACE TEMPERATURE DROPS BELOW ITS HEATING SETPOINT, THE REHEAT COIL VALVE SHALL MODULATE OPEN TO MAINTAIN THE HEATING SETPOINT.

SUPPLY AIR TEMPERATURE:
THE CONTROLLER SHALL MONITOR THE SUPPLY AIR TEMPERATURE AT THE DISCHARGE OF THE TERMINAL UNIT.

COOLING REQUESTS FOR AHU SA TEMP RESET:
IF THE SPACE TEMPERATURE RISES ABOVE THE COOLING SETPOINT FOR AN ADJUSTABLE PERIOD OF TIME, THE TERMINAL UNIT CONTROLLER SHALL SEND A COOLING REQUEST TO THE ASSOCIATED AHU CONTROLLER. THE REQUEST SHALL INCREASE OVER TIME IF THE SPACE TEMPERATURE SETPOINT REMAINS UNSATISFIED. AS THE SPACE TEMPERATURE IS SATISFIED, THE REQUEST TO THE AHU SHALL BE REMOVED.

POINTS LIST

POINT DESCRIPTOR	POINT TYPE DI	AI	DO	AO	VP	ALARM	TREND	OEM	NOTES
COOL/HEAT STATUS					●		●		
FAN S/S			●				●		
FAN STATUS	●					●	●		
HW VALVE CMD				●			●		
OCC OVERRIDE	●						●		
OCC STATUS					●		●		
PRIMARY AIRFLOW		●					●		
PRIMARY AIRFLOW SETPOINT					●		●		
PRIMARY SA DAMPER CMD				●			●		
SA TEMP		●					●		
SPACE TEMP		●				●	●		
SPACE TEMP SETPOINT					●		●		
SPACE TEMP SETPOINT ADJ		●				●	●		

GENERAL NOTES:
1. DIGITAL POINTS SHALL BE TRENDED ON A CHANGE IN VALUE. ANALOG POINTS SHALL BE TRENDED ON A TIME INTERVAL.
2. ALL POINTS SHOWN SHALL BE DISPLAYED ON THE BAS GRAPHICS.
3. ALL CONTROL DEVICES SHOWN ON THE SCHEMATIC ARE EXISTING TO REMAIN UNLESS NOTED OTHERWISE.

CABINET UNIT HEATER CONTROL (CUH-201)

NOT TO SCALE

ALTERNATE #3: ALL WORK ASSOCIATED WITH THE CABINET UNIT HEATERS SHALL BE INCLUDED IN ALTERNATE #3

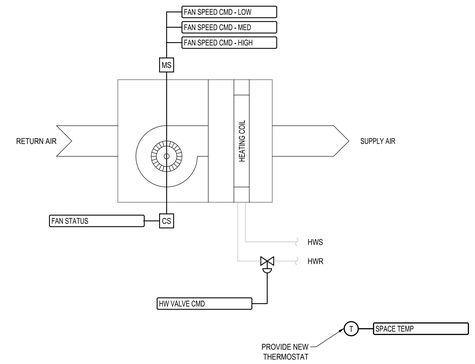

SEQUENCE OF OPERATION

RUN CONDITIONS - SCHEDULED:
THE UNIT SHALL RUN ACCORDING TO A USER DEFINABLE OCCUPANCY SCHEDULE. THE INITIAL OCCUPANCY SCHEDULE SHALL BE MONDAY - FRIDAY, 7AM - 8PM (ADJ.).

IN OCCUPIED MODE, THE UNIT SHALL MAINTAIN:
- 70°F (ADJ.) HEATING SETPOINT

IN UNOCCUPIED MODE, THE UNIT SHALL MAINTAIN:
- 65°F (ADJ.) HEATING SETPOINT

ALARMS SHALL BE PROVIDED AS FOLLOWS:
- LOW SPACE TEMPERATURE: IF THE SPACE TEMPERATURE IS LESS THAN THE HEATING SETPOINT BY 6°F (ADJ.) FOR 30 MINUTES (ADJ.)

ZONE OPTIMAL START:
THE CONTROLLER SHALL USE AN OPTIMAL START ALGORITHM FOR MORNING START-UP. THIS ALGORITHM SHALL MINIMIZE THE UNOCCUPIED WARM-UP PERIOD WHILE STILL ACHIEVING COMFORT CONDITIONS BY THE START OF SCHEDULED OCCUPIED PERIOD.

FAN CONTROL:
THE FAN SHALL RUN ANYTIME THE SPACE TEMPERATURE IS BELOW HEATING SETPOINT, UNLESS SHUTDOWN ON SAFETIES. THE FAN SPEEDS SHALL BE INDEXED AS FOLLOWS:
- LOW SPEED SHALL RUN ANYTIME THE SPACE TEMPERATURE IS BELOW SETPOINT.
- MEDIUM SPEED SHALL RUN ANYTIME THE SPACE TEMPERATURE IS BELOW SETPOINT BY 2°F (ADJ.).
- HIGH SPEED SHALL RUN ANYTIME THE SPACE TEMPERATURE IS BELOW SETPOINT BY 4°F (ADJ.).

TO PREVENT SHORT CYCLING, THE FAN SHALL HAVE A MINIMUM RUNTIME OF 5 MINUTES (ADJ.).

ALARMS SHALL BE PROVIDED AS FOLLOWS:
- FAN FAILURE: COMMANDED ON, BUT THE STATUS IS OFF.
- FAN IN HAND: COMMANDED OFF, BUT THE STATUS IS ON.

HEATING COIL VALVE:
THE CONTROLLER SHALL MEASURE THE SPACE TEMPERATURE AND MODULATE THE HEATING COIL VALVE TO MAINTAIN ITS HEATING SETPOINT.

THE HEATING SHALL BE ENABLED WHENEVER:
- OUTSIDE AIR TEMPERATURE IS LESS THAN 65°F (ADJ.)
- AND THE SPACE TEMPERATURE IS BELOW HEATING SETPOINT
- AND THE FAN IS ON

POINTS LIST

POINT DESCRIPTOR	POINT TYPE DI	AI	DO	AO	VP	ALARM	TREND	OEM	NOTES
FAN SPEED CMD - HIGH			●				●		
FAN SPEED CMD - LOW			●				●		
FAN SPEED CMD - MED			●				●		
FAN STATUS	●					●	●		
HW VALVE CMD				●			●		
SPACE TEMP		●				●	●		
SPACE TEMP SETPOINT					●		●		

GENERAL NOTES:
1. DIGITAL POINTS SHALL BE TRENDED ON A CHANGE IN VALUE. ANALOG POINTS SHALL BE TRENDED ON A TIME INTERVAL.
2. ALL POINTS SHOWN SHALL BE DISPLAYED ON THE BAS GRAPHICS.
3. ALL CONTROL DEVICES SHOWN ON THE SCHEMATIC ARE EXISTING TO REMAIN UNLESS NOTED OTHERWISE.

VENTILATION UNIT CONTROL (HV-1)

NOT TO SCALE

ALTERNATE #3: ALL WORK ASSOCIATED WITH THE VENTILATION UNIT HV-1 SHALL BE INCLUDED IN ALTERNATE #3

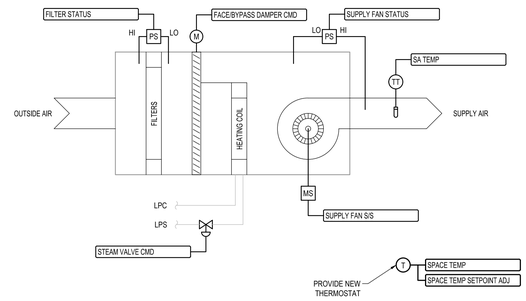

SEQUENCE OF OPERATION

RUN CONDITIONS - SCHEDULED:
THE UNIT SHALL RUN CONTINUOUSLY AND SHALL MAINTAIN:
- 60°F (ADJ.) HEATING SETPOINT

ALARMS SHALL BE PROVIDED AS FOLLOWS:
- LOW SPACE TEMPERATURE: IF THE SPACE TEMPERATURE IS LESS THAN THE HEATING SETPOINT BY 6°F (ADJ.) FOR 30 MINUTES (ADJ.)

ZONE SETPOINT ADJUST:
THE OCCUPANT SHALL BE ABLE TO ADJUST THE SPACE TEMPERATURE HEATING SETPOINT AT THE SPACE SENSOR BY +/- 3°F (ADJ.).

SUPPLY FAN:
THE SUPPLY FAN SHALL RUN ANYTIME THE UNIT IS COMMANDED TO RUN, UNLESS SHUTDOWN ON SAFETIES.

ALARMS SHALL BE PROVIDED AS FOLLOWS:
- SUPPLY FAN FAILURE: COMMANDED ON, BUT THE STATUS IS OFF.
- SUPPLY FAN IN HAND: COMMANDED OFF, BUT THE STATUS IS ON.

HEATING COIL VALVE:
THE CONTROLLER SHALL MEASURE THE SPACE TEMPERATURE AND MODULATE THE HEATING COIL VALVE TO MAINTAIN ITS HEATING SETPOINT.

THE HEATING SHALL BE ENABLED WHENEVER:
- OUTSIDE AIR TEMPERATURE IS LESS THAN 60°F (ADJ.)
- AND THE SPACE TEMPERATURE IS BELOW HEATING SETPOINT
- AND THE FAN IS ON

WHEN THE OUTSIDE AIR TEMPERATURE FALLS BELOW 35°F (ADJ.), THE PREHEAT COIL VALVE SHALL NOT CLOSE BELOW A MINIMUM FREEZE PROTECTION POSITION OF 50% (ADJ.).

FACE/BYPASS DAMPER:
WHEN THE OUTSIDE AIR TEMPERATURE IS BELOW 35°F (ADJ.) AND THE PREHEAT COIL VALVE IS AT ITS MINIMUM FREEZE PROTECTION POSITION, THE FACE/BYPASS DAMPER SHALL MODULATE TO BYPASS THE PREHEAT COIL TO MAINTAIN SPACE TEMPERATURE HEATING SETPOINT.

THE SEQUENCE SHALL BE CONFIGURED TO PREVENT THE FACE/BYPASS DAMPER FROM BYPASSING THE PREHEAT COIL WHEN THE PREHEAT COIL VALVE IS OPEN BEYOND ITS MINIMUM FREEZE PROTECTION POSITION.

FILTER DIFFERENTIAL PRESSURE MONITORING:
UPON TRIPPING OF THE DIFFERENTIAL PRESSURE SWITCH ACROSS THE FILTERS, THE BAS SHALL GENERATE AN ALARM.

MISCELLANEOUS MONITORING:
THE BAS SHALL ALSO MONITOR THE FOLLOWING:
- SUPPLY AIR TEMPERATURE

POINTS LIST

POINT DESCRIPTOR	POINT TYPE DI	AI	DO	AO	VP	ALARM	TREND	OEM	NOTES
FACE/BYPASS DAMPER CMD				●			●		
FILTER STATUS	●					●			
SA TEMP		●					●		
SPACE TEMP		●				●	●		
SPACE TEMP SETPOINT					●		●		
SPACE TEMP SETPOINT ADJ		●					●		
STEAM VALVE CMD				●			●		
SUPPLY FAN S/S			●				●		
SUPPLY FAN STATUS	●					●	●		

GENERAL NOTES:
1. DIGITAL POINTS SHALL BE TRENDED ON A CHANGE IN VALUE. ANALOG POINTS SHALL BE TRENDED ON A TIME INTERVAL.
2. ALL POINTS SHOWN SHALL BE DISPLAYED ON THE BAS GRAPHICS.
3. ALL CONTROL DEVICES SHOWN ON THE SCHEMATIC ARE EXISTING TO REMAIN UNLESS NOTED OTHERWISE.

MCKIM&CREED
Venture IV Building, Suite 500
2700 Yonkers Road
Raleigh, North Carolina 27606
Phone: (919) 233-8091 , Fax: (919) 233-8031
www.mckimcreed.com

Western Carolina University

NORTH CAROLINA PROFESSIONAL ENGINEER SEAL 045325 ENGINEER STEVEN M. THURSTON 3-3-23

REV	REVISION DESCRIPTION	DATE

STILLWELL BUILDING
HVAC CONTROLS
REPLACEMENT
WESTERN CAROLINA
UNIVERSITY

SCO ID: 22-24466-01A
CODE: 421/26 ITEM: 316

DATE	3/2/2023
M&C PROJ. #	07020-0003
DRAWN	SMT
DESIGNED	SMT
CHECKED	WTR
PROJ. MGR	WTR

SCALE
HORIZONTAL:
AS NOTED

VERTICAL:
N/A

BID DOCUMENTS

MECHANICAL CONTROLS SCHEMATICS

M305

I:\07020\0003\ENG\80-DRAWINGS\86-DESIGN\BEH-HVAC-DESIGN\M305-CONTROLS.DWG 3/3/2023 10:55:50 STEVEN.CARVER

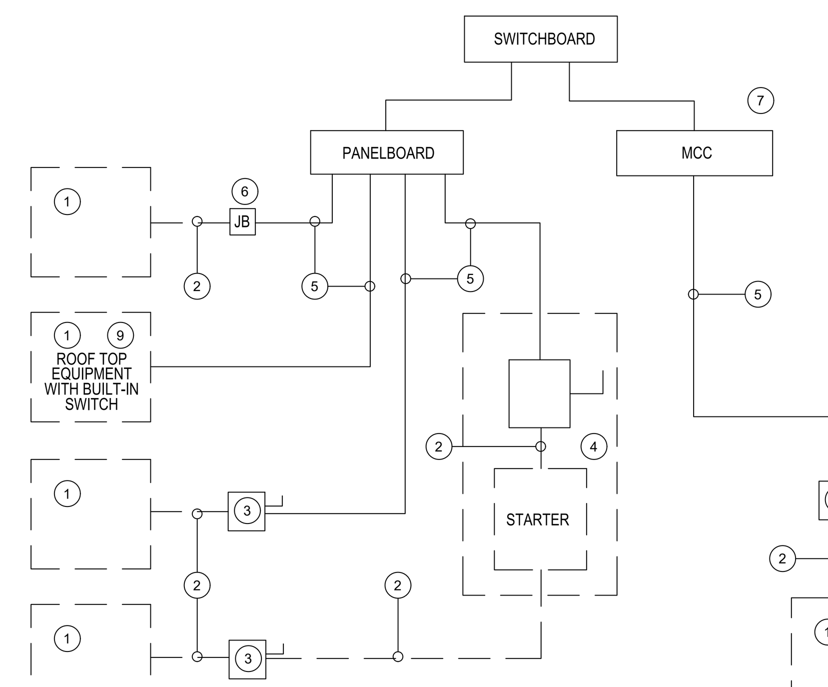

ELECTRICAL NOTES

UNLESS OTHERWISE NOTED ON THE PLANS:

1. EQUIPMENT OF TRADES OTHER THAN ELECTRICAL.
2. CONDUIT AND WIRING BY HVAC, PLUMBING, OR OTHER TRADES.
3. IF AN ADDITIONAL DISCONNECT IS REQUIRED BY NEC, IT SHALL BE PROVIDED AND INSTALLED BY THE EQUIPMENT CONTRACTOR.
4. A COMBINATION STARTER OR VFD MAY BE USED IN LIEU OF A SEPARATE DISCONNECT SWITCH AND STARTER. LOCATE ADJACENT TO EQUIPMENT.
5. FEEDER CIRCUIT WIRING AND CONDUIT IN ELECTRICAL WORK. SEE PANELBOARD SCHEDULES FOR WIRE AND BREAKER SIZES.
6. JUNCTION BOX MAY BE SHOWN ON ELECTRICAL PLANS FOR SOME EQUIPMENT IF NO STARTER OR DISCONNECT IS SUPPLIED. A JUNCTION BOX SHALL BE INSTALLED ADJACENT TO EQUIPMENT. THE ELECTRICAL CONTRACTOR SHALL PROVIDE LINE SIDE WIRING TO THE JUNCTION BOX. LOAD SIDE WIRING WILL BE PROVIDED BY MECHANICAL CONTRACTOR OR OTHER TRADES.
7. PROJECTS UTILIZING AN MCC, THE STARTER, CB, OR VFD IN THE MCC ARE PROVIDED BY THE ELECTRICAL CONTRACTOR.
8. IN ALL CASES THE EQUIPMENT CONTRACTOR SHALL MAKE FINAL CONNECTIONS, START UP, AND TEST EQUIPMENT.
9. IF THE ROOF TOP EQUIPMENT IS NOT PROVIDED WITH BUILT IN SWITCH, THE ELECTRICAL CONTRACTOR SHALL PROVIDE A DISCONNECT SWITCH.

NOT TO SCALE

1 ELECTRICAL EQUIPMENT CONNECTIONS

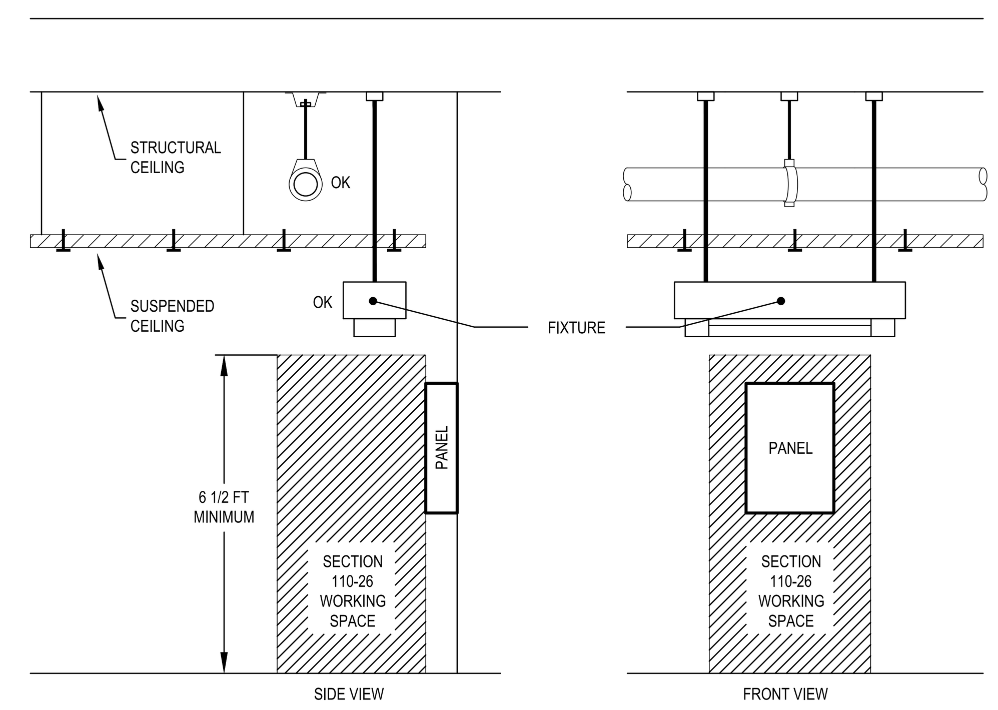

NOT TO SCALE

2 WORKING CLEARANCE FOR ELECTRICAL EQUIPMENT

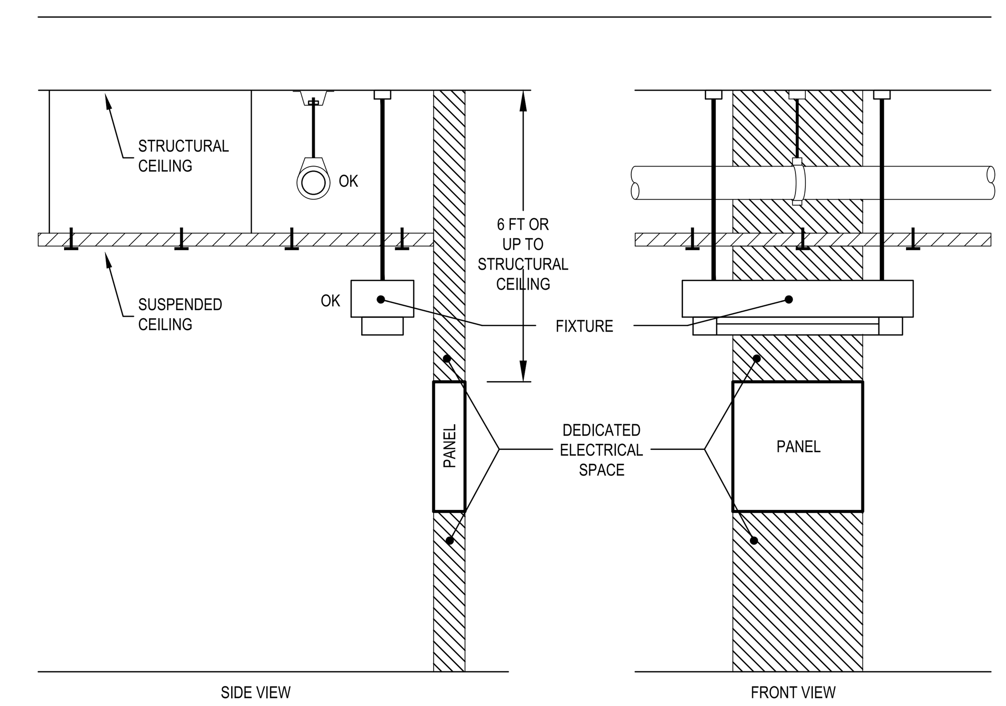

NOT TO SCALE

3 DEDICATED SPACE FOR ELECTRICAL EQUIPMENT

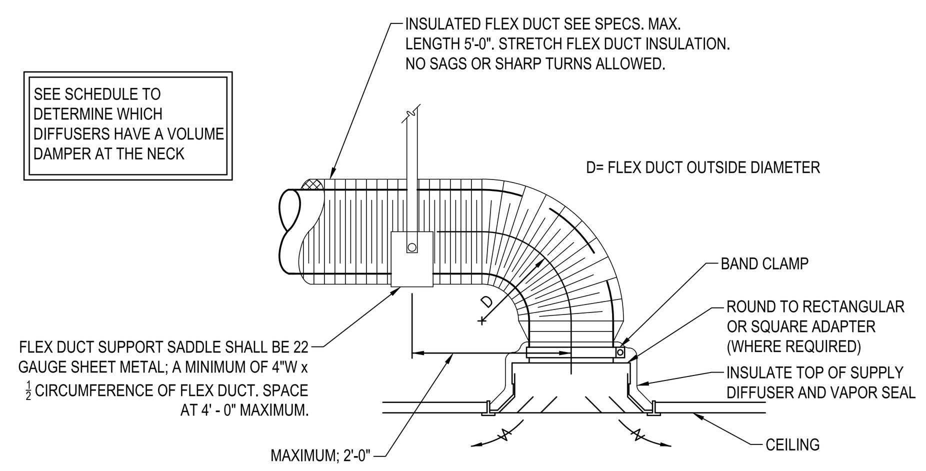

NOT TO SCALE

4 DIFFUSER CONNECTION DETAIL

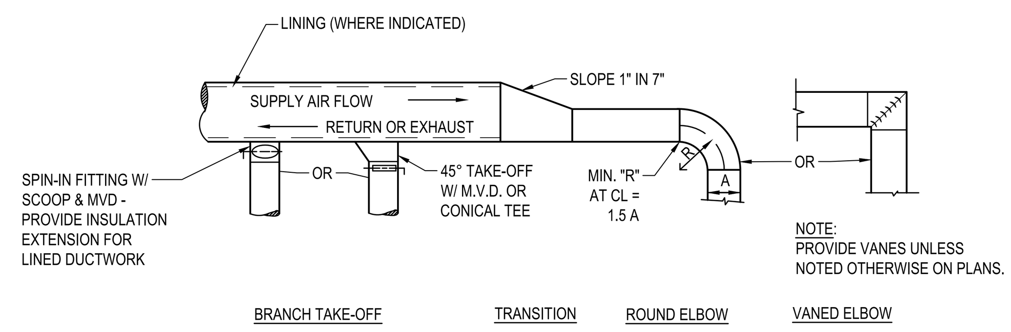

NOTE:
1. DAMPERS WITH LOCKING QUADRANTS SHALL BE PROVIDED IN ALL BRANCH DUCTS OF LOW PRESSURE SUPPLY, RETURN AND EXHAUST DUCTS. LOCATE DAMPERS IN AREAS W/ ACCESSIBLE CEILINGS OR PROVIDE CEILING ACCESS DOORS OR REMOTE ADJUSTMENT CABLE AND LINKAGE FOR CONTROL KNOB.
2. INSULATE OR LINE BRANCH DUCTS AS INDICATED.

NOT TO SCALE

5 LOW PRESSURE SUPPLY, RETURN, OR EXHAUST DUCTWORK

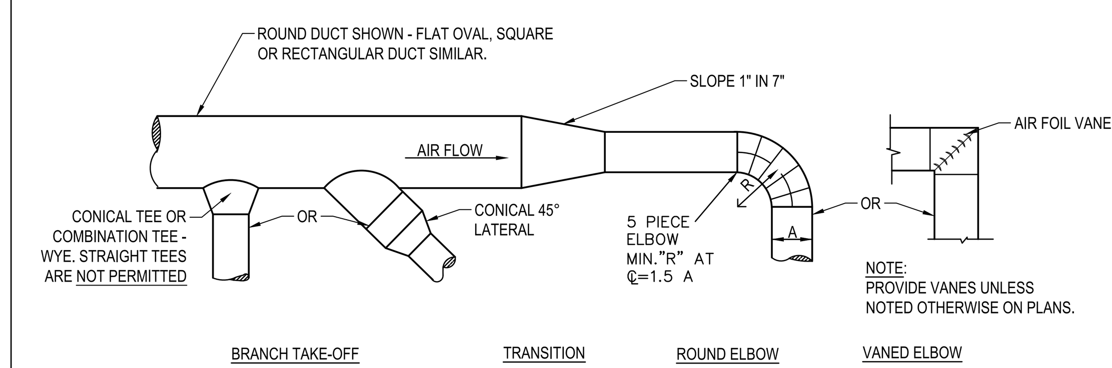

NOT TO SCALE

6 MEDIUM OR HIGH PRESSURE DUCTWORK

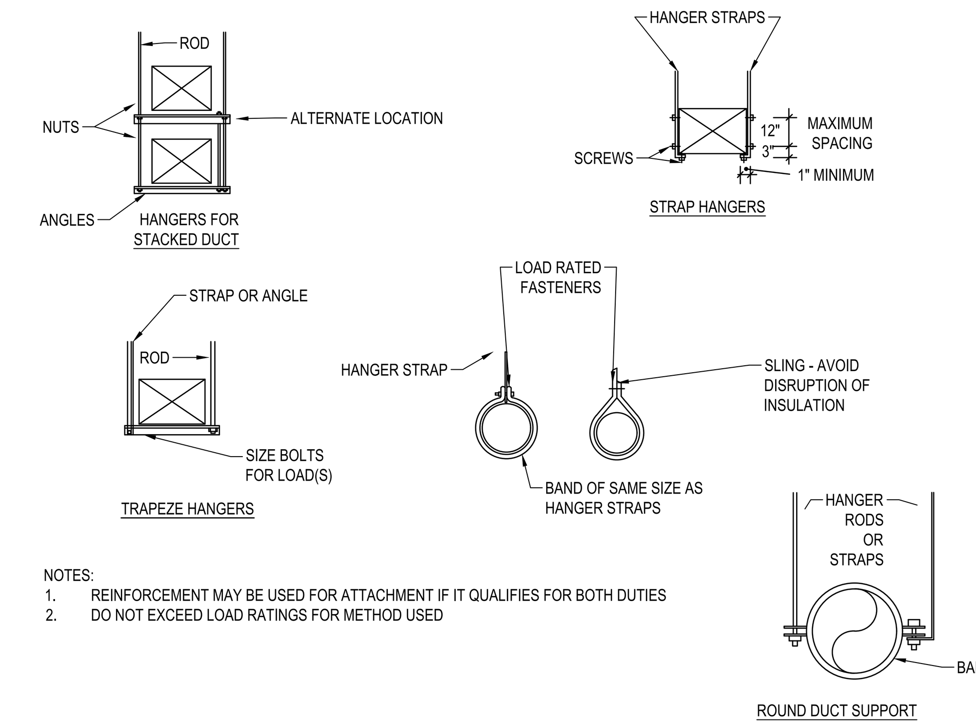

NOTES:
1. REINFORCEMENT MAY BE USED FOR ATTACHMENT IF IT QUALIFIES FOR BOTH DUTIES
2. DO NOT EXCEED LOAD RATINGS FOR METHOD USED

NOT TO SCALE

7 TYPICAL DUCT HANGER DETAILS

SYSTEM NO. W-L-1001
JUNE 15, 2005

F RATINGS - 1, 2, 3 AND 4 HR (SEE ITEMS 2 AND 3)
T RATINGS - 0, 1, 2, 3 AND 4 HR (SEE ITEM 3)
L RATING AT AMBIENT - LESS THAN 1 CFM PER SQ. FT.
L RATING AT 400°F - LESS THAN 1 CFM PER SQ. FT.

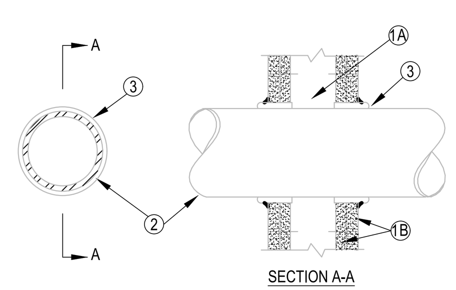

SECTION A-A

1. WALL ASSEMBLY - THE 1, 2, 3 OR 4 HR FIRE-RATED GYPSUM WALLBOARD/STUD WALL ASSEMBLY SHALL BE CONSTRUCTED OF THE MATERIALS AND IN THE MANNER DESCRIBED IN THE INDIVIDUAL U300 OR U400 SERIES WALL OR PARTITION DESIGNS IN THE UL FIRE RESISTANCE DIRECTORY AND SHALL INCLUDE THE FOLLOWING CONSTRUCTION FEATURES:

A. STUDS - WALL FRAMING MAY CONSIST OF EITHER WOOD STUDS (MAX 2 H FIRE RATED ASSEMBLIES) OR STEEL CHANNEL STUDS. WOOD STUDS TO CONSIST OF NOM 2 BY 4 IN. (51 BY 102 MM) LUMBER SPACED 16 IN. (406 MM) OC WITH NOM 2 BY 4 IN. (51 BY 102 MM) LUMBER END PLATES AND CROSS BRACES. STEEL STUDS TO BE MIN 3-5/8 IN. (92 MM) WIDE BY 1-3/8 IN. (35 MM) DEEP CHANNELS SPACED MAX 24 IN. (610 MM) OC.

B. GYPSUM BOARD* - NOM 1/2 OR 5/8 IN. (13 OR 16 MM) THICK, 4 FT. (122 CM) WIDE WITH SQUARE OR TAPERED EDGES. THE GYPSUM WALLBOARD TYPE, THICKNESS, NUMBER OF LAYERS, FASTENER TYPE AND SHEET ORIENTATION SHALL BE AS SPECIFIED IN THE INDIVIDUAL U300 OR U400 SERIES DESIGN IN THE UL FIRE RESISTANCE DIRECTORY. MAX DIAM OF OPENING IS 26 IN. (660 MM).

2. THROUGH-PENETRANT - ONE METALLIC PIPE, CONDUIT OR TUBING INSTALLED EITHER CONCENTRICALLY OR ECCENTRICALLY WITHIN THE FIRESTOP SYSTEM. THE ANNULAR SPACE BETWEEN PIPE, CONDUIT OR TUBING AND PERIPHERY OF OPENING SHALL BE MIN 0 IN. / (0 MM). (POINT CONTACT) TO MAX 2 IN. (51 MM) PIPE, CONDUIT OR TUBING TO BE RIGIDLY SUPPORTED ON BOTH SIDES OF WALL ASSEMBLY. THE FOLLOWING TYPES AND SIZES OF METALLIC PIPES, CONDUITS OR TUBING MAY BE USED:

A. STEEL PIPE -- NOM 24 IN. (610 MM) DIAM (OR SMALLER) SCHEDULE 10 (OR HEAVIER) STEEL PIPE.

B. IRON PIPE - NOM 24 IN. (610 MM) DIAM (OR SMALLER) SERVICE WEIGHT (OR HEAVIER) CAST IRON SOIL PIPE, NOM 12 IN. (305 MM) DIAM (OR SMALLER) OR CLASS 50 (OR HEAVIER) DUCTILE IRON PRESSURE PIPE.

C. CONDUIT - NOM 6 IN. (152 MM) DIAM (OR SMALLER) STEEL CONDUIT OR NOM 4 IN. (102 MM) DIAM (OR SMALLER) STEEL ELECTRICAL METALLIC TUBING.

D. COPPER TUBING - NOM 6 IN. (152 MM) DIAM (OR SMALLER) TYPE L (OR HEAVIER) COPPER TUBING.

E. COPPER PIPE - NOM 6 IN. (152 MM) DIAM (OR SMALLER) REGULAR (OR HEAVIER) COPPER PIPE.

F. THROUGH PENETRATING PRODUCT* - FLEXIBLE METAL PIPING THE FOLLOWING TYPES OF STEEL FLEXIBLE METAL GAS PIPING MAY BE USED:

1. NOM 2 IN. (51 MM) DIAM (OR SMALLER) STEEL FLEXIBLE METAL GAS PIPING. PLASTIC COVERING ON PIPING MAY OR MAY NOT BE REMOVED ON BOTH SIDES OF FLOOR OR WALL ASSEMBLY.

OMEGA FLEX INC

2. NOM 1 IN. (25 MM) DIAM (OR SMALLER) STEEL FLEXIBLE METAL GAS PIPING. PLASTIC COVERING ON PIPING MAY OR MAY NOT BE REMOVED ON BOTH SIDES OF FLOOR OR WALL ASSEMBLY.

TITEFLEX CORP A BUNDY CO

3. NOM 1 IN. (25 MM) DIAM (OR SMALLER) STEEL FLEXIBLE METAL GAS PIPING. PLASTIC COVERING ON PIPING MAY OR MAY NOT BE REMOVED ON BOTH SIDES OF FLOOR OR WALL ASSEMBLY.

WARD MFG INC

3. FILL, VOID OR CAVITY MATERIAL* - CAULK OR SEALANT- MIN 5/8, 1-1/4, 1-7/8 AND 2-1/2 IN. (16, 32, 48 AND 64 MM) THICKNESS OF CAULK FOR 1, 2, 3 AND 4 HR RATED ASSEMBLIES, RESPECTIVELY, APPLIED WITHIN ANNULUS, FLUSH WITH BOTH SURFACES OF WALL. MIN 1/4 IN. (6 MM) DIAM BEAD OF CAULK APPLIED TO GYPSUM BOARD/PENETRANT INTERFACE AT POINT CONTACT LOCATION ON BOTH SIDES OF WALL. THE HOURLY F RATING OF THE FIRESTOP SYSTEM IS DEPENDENT UPON THE HOURLY FIRE RATING OF THE WALL ASSEMBLY IN WHICH IT IS INSTALLED, AS SHOWN IN THE FOLLOWING TABLE. THE HOURLY T RATING OF THE FIRESTOP SYSTEM IS DEPENDENT UPON THE TYPE OR SIZE OF THE PIPE OR CONDUIT AND THE HOURLY FIRE RATING OF THE WALL ASSEMBLY IN WHICH IT IS INSTALLED, AS TABULATED BELOW:

MAX PIPE OR CONDUIT DIAM IN (MM)	F RATING HR.	T RATING HR
1 (25)	1 OR 2	0+, 1 OR 2
1 (25)	3 OR 4	3 OR 4
4 (102)	1 OR 2	0
6 (152)	3 OR 4	0
12 (305)	1 OR 2	0

+ WHEN COPPER PIPE IS USED, T RATING IS 0 H.
3M COMPANY - CP 25WB+ OR FB-3000 WT.
* BEARING THE UL CLASSIFICATION MARK.

REPRINTED FROM THE UL ONLINE CERTIFICATIONS DIRECTORY WITH PERMISSION FROM UNDERWRITERS LABORATORIES INC.
FILENAME = XHEZ.W-L-1001
http://database.ul.com/cgi-bin/XYV/template/LISEXT/1FRAME/gfilenbr.html
TYPE W-L-1001 IN UL FILE NUMBER BOX, CLICK ON SEARCH
COPYRIGHT© 2010 UNDERWRITERS LABORATORIES INC.®

SYSTEM NO. C-AJ-1001
March 5, 2007

F RATING - 3 HR
T RATING - 0 HR

W RATING- CLASS 1 (SEE ITEM 4)

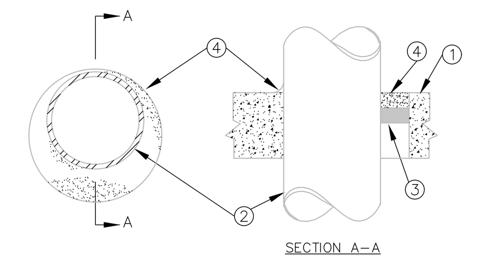

SECTION A-A

1. FLOOR OR WALL ASSEMBLY - MIN 4-1/2 IN. (114 MM) THICK LIGHTWEIGHT OR NORMAL WEIGHT (100-150 PCF OR 1600-2400 KG/M3) CONCRETE. WALL MAY ALSO BE CONSTRUCTED OF ANY UL CLASSIFIED CONCRETE BLOCKS*. MAX DIAM OF CIRCULAR THROUGH OPENING IS 32-1/2 IN. (826 MM).

SEE CONCRETE BLOCKS (CAZT) CATEGORY IN THE FIRE RESISTANCE DIRECTORY FOR NAMES OF MANUFACTURERS.

1A. STEEL SLEEVE - (OPTIONAL, NOT SHOWN) - NOM 12 IN. (305 MM) DIAM (OR SMALLER) SCHEDULE 40 (OR HEAVIER) STEEL PIPE SLEEVE CAST INTO CONCRETE FLOOR OR WALL. SLEEVE TO BE FLUSH WITH OR PROJECT MAX 2 IN. (51 MM) FROM TOP SURFACE OF FLOOR OR FROM BOTH SURFACES OF WALL.

2. THROUGH - PENETRANT - ONE METALLIC PIPE, CONDUIT OR TUBING INSTALLED EITHER CONCENTRICALLY OR ECCENTRICALLY WITHIN THE FIRESTOP SYSTEM. THE ANNULAR SPACE BETWEEN PIPE, CONDUIT OR TUBING AND PERIPHERY OF OPENING SHALL BE MIN OF 0 IN. (0 MM, POINT CONTACT) TO MAX 1-3/8 IN. (35 MM) PIPE, CONDUIT OR TUBING TO BE RIGIDLY SUPPORTED ON BOTH SIDES OF WALL ASSEMBLY. THE FOLLOWING TYPES AND SIZES OF METALLIC PIPES, CONDUITS, OR TUBING MAY BE USED:

A. STEEL PIPE - NOM 30 IN. (762 MM) DIAM (OR SMALLER) SCHEDULE 10 (OR HEAVIER) STEEL PIPE.
A1. IRON PIPE - NOM 30 IN. (762 MM) DIAM (OR SMALLER) CAST OR DUCTILE IRON PIPE.
B. CONDUIT - NOM 6 IN. (152 MM) DIAM (OR SMALLER) RIGID STEEL CONDUIT.
C. CONDUIT - NOM 4 IN. (102 MM) DIAM (OR SMALLER) STEEL ELECTRICAL METALLIC TUBING.

3. PACKING MATERIAL - POLYETHYLENE BACKER ROD OR NOM 1 IN. (25 MM) THICKNESS OF TIGHTLY-PACKED CERAMIC (ALUMINA SILICA) FIBER BLANKET, MINERAL WOOL BATT OR GLASS FIBER INSULATION MATERIAL USED AS A PERMANENT FORM. PACKING MATERIAL TO BE RECESSED FROM TOP SURFACE OF FLOOR OR FROM BOTH SURFACES OF SOLID CONCRETE OR CONCRETE BLOCK WALL AS REQUIRED TO ACCOMMODATE THE REQUIRED THICKNESS OF CAULK FILL MATERIAL (ITEM 4). AS AN ALTERNATE WHEN MAX PIPE SIZE IS 10 IN. (254 MM) DIAM AND WHEN MAX ANNULAR SPACE IS 1 IN. (25 MM), A MIN 1 IN. (25 MM) THICKNESS OF TIGHTLY-PACKED CERAMIC FIBER BLANKET OR MINERAL WOOL BATT PACKING MATERIAL MAY BE RECESSED MIN 1/2 IN. (13 MM) FROM BOTTOM SURFACE OF FLOOR OR FROM EITHER SIDE OF SOLID CONCRETE WALL.

4. FILL, VOID OR CAVITY MATERIALS* - CAULK - APPLIED TO FILL THE ANNULAR SPACE TO THE MIN THICKNESS SHOWN IN THE FOLLOWING TABLE:

MAX PIPE DIAM IN	MAX ANNULAR SPACE IN.	PACKING MTL TYPE (a)	MIN. CAULK THKNS IN
10 (254)	1 (25)	BR, CF, GF or MW	1/2 (13) (b)
10 (254)	1 (25)	CF or MW	1/2 (13) (c)
30 (762)	2-1/2 (64)	BR, CF, GF or MW	1 (25) (b)

(a) BR= POLYETHYLENE BACKER ROD.
CF= CERAMIC FIBER BLANKET.
GF= GLASS FIBER INSULATION.
MW= MINERAL-WOOL BATT
(b) CAULK INSTALLED FLUSH WITH TOP SURFACE OF FLOOR OR BOTH SURFACES OF WALL
(c) CAULK INSTALLED FLUSH WITH BOTTOM SURFACE OF FLOOR OR ONE SURFACE OF SOLID (NON-CONCRETE BLOCK) WALL.

3M COMPANY- TYPE CP 25WB+ OR FB-3000 WT.

(NOTE- W RATING APPLIES ONLY WHEN FB-3000 WT IS USED ON TOP OF SURFACE OF FLOOR AND WHEN IT LAPS ONTO CONCRETE FOR SLEEVED OPENING.)

* BEARING THE UL CLASSIFICATION MARK.

REPRINTED FROM THE UL ONLINE CERTIFICATIONS DIRECTORY
FILENAME = XHEZ.C-AJ-1001
http://database.ul.com/cgi-bin/XYV/template/LISEXT/1FRAME/gfilenbr.html
TYPE C-AJ-1001 IN UL FILE NUMBER BOX, CLICK ON SEARCH
COPYRIGHT © 2010 BY UNDERWRITERS LABORITORIES INC. ®

McKIM & CREED
Venture IV Building, Suite 500
1730 Varsity Drive
Raleigh, North Carolina 27606
Phone: (919) 233-8091, Fax: (919) 233-8031
www.mckimcreed.com

Western Carolina UNIVERSITY

NORTH CAROLINA PROFESSIONAL SEAL 045325 ENGINEER STEVEN M. THIGPEN 3-2-23

REV	REVISION DESCRIPTION	DATE

STILLWELL BUILDING
HVAC CONTROLS
REPLACEMENT
WESTERN CAROLINA
UNIVERSITY

SCO ID: 22-24466-01A
CODE: 42126 ITEM: 316

DATE	3/2/2023
M&C PROJ. #	07020-0003
DRAWN	JMT
DESIGNED	WTR
CHECKED	WTR
PROJ. MGR.	WTR

SCALE
HORIZONTAL: AS NOTED
VERTICAL: N/A

BID DOCUMENTS

MECHANICAL DETAILS

M501

LAB AIR VALVE SCHEDULE

TAG	SERVES	VALVE LOCATION	SERVICE	MAXIMUM AIRFLOW (CFM)	OCCUPIED MINIMUM AIRFLOW (CFM)	UNOCCUPIED MINIMUM AIRFLOW (CFM)	INLET SIZE	MANUFACTURER/ MODEL #	NOTES
VV-101	BIOTECH TEACHING LAB 115	BIOTECH TEACHING LAB 115	GENERAL EXHAUST	1,200	430	200	12"	ACCUTROL / AVT6000	1 THROUGH 4
VV-102	VALVE DEMOLISHED								
VV-103	BIOTECH TEACHING LAB 115	BIOTECH TEACHING LAB 115	SUPPLY	1,200	430	200	12"	ACCUTROL / AVT6000	1 THROUGH 4
VV-104	MICRO-ARRAYER 123	MICRO-ARRAYER 123	GENERAL EXHAUST	430	190	-	8"	ACCUTROL / AVT6000	1 THROUGH 4
VV-105	MICRO-ARRAYER 123A	MICRO-ARRAYER 123A	SUPPLY	330	90	-	8"	ACCUTROL / AVT6000	1 THROUGH 4
VV-106	MICRO-BIOLOGY LAB 125	MICRO-BIOLOGY LAB 125	FUME HOOD FH-2	600	300	300	10"	ACCUTROL / AVC6000	1 THROUGH 4
VV-107	MICRO-BIOLOGY LAB 125	MICRO-BIOLOGY LAB 125	GENERAL EXHAUST	1,200	320	310	12"	ACCUTROL / AVT6000	1 THROUGH 4
VV-108	MICRO-BIOLOGY LAB 125	MICRO-BIOLOGY LAB 125	SUPPLY	1,300	720	410	12"	ACCUTROL / AVT6000	1 THROUGH 4
VV-109	MICRO-BIOLOGY PREP 130	DNA SEQUENCER 134	GENERAL EXHAUST	520	260	190	8"	ACCUTROL / AVT6000	1 THROUGH 4
VV-110	MICRO-BIOLOGY PREP 130	MICRO-BIOLOGY PREP 130	SUPPLY	420	160	90	8"	ACCUTROL / AVT6000	1 THROUGH 4
VV-111	DR. BONDS' LAB 136	DR. BONDS' LAB 136	GENERAL EXHAUST	860	460	-	10"	ACCUTROL / AVT6000	1 THROUGH 4
VV-112	DR. BONDS' LAB 136	DR. BONDS' LAB 136	FUME HOOD FH-1	400	200	-	8"	ACCUTROL / AVC6000	1 THROUGH 4
VV-113	DR. BONDS' LAB 136	DR. BONDS' LAB 136	SUPPLY	960	760	-	10"	ACCUTROL / AVT6000	1 THROUGH 4
VV-114	DNA SEQUENCER 134	DNA SEQUENCER 134	SUPPLY	710	220	-	10"	ACCUTROL / AVT6000	1 THROUGH 4
VV-115	DNA SEQUENCER 134	DNA SEQUENCER 134	GENERAL EXHAUST	810	320	-	10"	ACCUTROL / AVT6000	1 THROUGH 4
VV-116	BIOTECH STORAGE 118	BIOTECH STORAGE 118	GENERAL EXHAUST	130	130	-	6"	ACCUTROL / AVT6000	1 THROUGH 4
VV-117	CENTRIFUGE & H. EQUIP 120	CENTRIFUGE & H. EQUIP 120	GENERAL EXHAUST	640	260	230	10"	ACCUTROL / AVT6000	1 THROUGH 4
VV-118	CENTRIFUGE & H. EQUIP 120	CENTRIFUGE & H. EQUIP 120	SUPPLY	540	160	130	10"	ACCUTROL / AVT6000	1 THROUGH 4
VV-119	TISSUE CULTURE 121	TISSUE CULTURE 121	GENERAL EXHAUST	455	190	-	8"	ACCUTROL / AVT6000	1 THROUGH 4
VV-120	TISSUE CULTURE 121	TISSUE CULTURE 121	SUPPLY	355	90	-	8"	ACCUTROL / AVT6000	1 THROUGH 4
VV-121	RADIATION WASTE 126A	RADIATION & DARK ROOM 126	GENERAL EXHAUST	255	140	-	8"	ACCUTROL / AVT6000	1 THROUGH 4
VV-122	RADIATION & DARK ROOM 126	RADIATION & DARK ROOM 126	SUPPLY	155	40	-	6"	ACCUTROL / AVT6000	1 THROUGH 4
VV-123	AUTOCLAVE 127	AUTOCLAVE 127	GENERAL EXHAUST	430	190	-	8'	ACCUTROL / AVT6000	1 THROUGH 4
VV-124	AUTOCLAVE 127	AUTOCLAVE 127	SUPPLY	330	90	-	8"	ACCUTROL / AVT6000	1 THROUGH 4
VV-125	FERMENT. FACILITY 131	FERMENT. FACILITY 131	GENERAL EXHAUST	360	190	-	8"	ACCUTROL / AVT6000	1 THROUGH 4
VV-126	FERMENT. FACILITY 131	FERMENT. FACILITY 131	SUPPLY	260	90	-	8"	ACCUTROL / AVT6000	1 THROUGH 4
VV-127	STORAGE 132	STORAGE 132	GENERAL EXHAUST	180	180	-	6"	ACCUTROL / AVT6000	1 THROUGH 4
VV-201	BIOLOGY RESEARCH 201	BIOLOGY RESEARCH 201	FUME HOOD FH-2	600	300	-	10"	ACCUTROL / AVC6000	1 THROUGH 4
VV-202	BIOLOGY RESEARCH 201	BIOLOGY RESEARCH 201	GENERAL EXHAUST	530	230	-	10"	ACCUTROL / AVT6000	1 THROUGH 4
VV-203	BIOLOGY RESEARCH 201	BIOLOGY RESEARCH 201	SUPPLY	630	630	-	10"	ACCUTROL / AVT6000	1 THROUGH 4
VV-204	BIOLOGY LAB C 210	BIOLOGY LAB C 210	GENERAL EXHAUST	1,440	890	590	12"	ACCUTROL / AVT6000	1 THROUGH 4
VV-205	BIOLOGY LAB C 210	BIOLOGY LAB C 210	SUPPLY	1,240	690	390	12"	ACCUTROL / AVT6000	1 THROUGH 4
VV-206	LAB STORAGE 209	LAB STORAGE 209	GENERAL EXHAUST	160	160	-	6"	ACCUTROL / AVT6000	1 THROUGH 4
VV-207	BIOLOGY LAB B 215	BIOLOGY LAB B 215	GENERAL EXHAUST	1,440	870	580	12"	ACCUTROL / AVT6000	1 THROUGH 4
VV-208	BIOLOGY LAB B 215	BIOLOGY LAB B 215	SUPPLY	1,240	670	380	12"	ACCUTROL / AVT6000	1 THROUGH 4
VV-209	BIOLOGY PREP 214	BIOLOGY PREP 214	GENERAL EXHAUST	440	90	-	8"	ACCUTROL / AVT6000	1 THROUGH 4
VV-210	BIOLOGY PREP 214	BIOLOGY PREP 214	FUME HOOD FH-2	600	300	-	10"	ACCUTROL / AVC6000	1 THROUGH 4
VV-211	BIOLOGY PREP 214	BIOLOGY PREP 214	SUPPLY	540	190	-	10"	ACCUTROL / AVT6000	1 THROUGH 4
VV-212	BIOLOGY LAB A 219	BIOLOGY LAB A 219	FUME HOOD FH-2	600	300	300	10"	ACCUTROL / AVC6000	1 THROUGH 4
VV-213	BIOLOGY LAB A 219	BIOLOGY LAB A 219	GENERAL EXHAUST	1,140	280	280	12"	ACCUTROL / AVT6000	1 THROUGH 4
VV-214	BIOLOGY LAB A 219	BIOLOGY LAB A 219	SUPPLY	1,240	680	380	12"	ACCUTROL / AVT6000	1 THROUGH 4
VV-215	LAB STORAGE 218	LAB STORAGE 218	GENERAL EXHAUST	170	170	-	6"	ACCUTROL / AVT6000	1 THROUGH 4

NOTES:

1. MAXIMUM AIR PRESSURE DROP SHALL NOT EXCEED 0.3".
2. MAXIMUM DISCHARGE N.C. AT 1.5" S.P. = 40.
3. "BASIS OF DESIGN" SHALL BE ACCUTROL, APPROVED EQUALS BY ROSEMOUNT, TRIATEK OR TEK-AIR ARE ACCEPTABLE.
4. ALTERNATE #1: LAB VALVE SHALL BE ACCUTROL AS A PREFERRED BRAND ALTERNATE.

AIR DISTRIBUTION SCHEDULE

TAG	DESCRIPTION
EAG-1 - -	CEILING EXHAUST - PRICE PDDR SERIES PERFORATED FACE RETURN; ALUMINUM CONSTRUCTION SUITABLE FOR LAY-IN CEILING OR SURFACE MOUNT AS REQUIRED; CFM AND NECK SIZE SHALL BE AS NOTED ON PLANS; BAKED OFF-WHITE ENAMEL FINISH.

NOTES:

1. MC SHALL COORDINATE LOCATIONS WITH REFLECTED CEILING PLANS TO AVOID CONFLICT WITH OTHER TRADES.
2. SURFACE MOUNTED DEVICES (IN CEILING) SHALL BE LOCATED IN CENTER OF TILE OR OTHER LOCATION AS APPROVED BY ARCHITECT.
3. CONTRACTOR SHALL VERIFY FRAME TYPES SO THEY ARE COMPATIBLE WITH THE ARCHITECTURAL FINISHES (LAY-IN, SURFACE MTD., ETC.).
4. "BASIS OF DESIGN" SHALL BE PRICE, APPROVED EQUALS BY METAL-AIRE, CARNES, NAILOR, TITUS AND TUTTLE & BAILEY ARE ACCEPTBLE.

EX SERIES FAN POWERED BOX SCHEDULE

TAG	SERVES (ROOM)	MAX PRIMARY AIRFLOW (CFM)	MIN PRIMARY AIRFLOW (CFM)	FAN AIRFLOW (CFM)	NOTES
VAV-101	COMPUTER CLUSTER 116	1,050	525	1,050	1, 2
VAV-102	SPECTROMETER 114	105	30	220	1, 2
VAV-103	ADVANCED MICROSCOPY 124	215	65	450	1, 2
VAV-104	VENDING 133	120	35	295	1, 2
VAV-105	DR. BONDS' OFFICE 136A	60	20	190	1, 2
VAV-106	LAB MGR'S OFFICE 136B	300	90	300	1, 2
VAV-201	OFFICE 202	315	95	315	1, 2
VAV-202	ENVIRO CONTROL 203	55	20	175	1, 2
VAV-203	FACULTY OFFICES 205 & 206	480	145	480	1, 2
VAV-204	FACULTY OFFICES 207 & 211	490	150	490	1, 2
VAV-205	GREEN HOUSE PREP 212	510	155	510	1, 2
VAV-206	HERB RES 220A & HERB PREP 220B	530	160	530	1, 2
VAV-207	HERB LIBRARY 220	500	150	500	1, 2
VAV-208	HERB LIBRARY 220	500	150	500	1, 2
VAV-209	HERB LIBRARY 220	500	150	500	1, 2
VAV-301	EMERTUS OFFICE 303	250	75	315	1, 2
VAV-302	FACULTY OFFICE 302	210	65	240	1, 2
VAV-303	FACULTY OFFICES 307 & 308	600	180	600	1, 2
VAV-304	FACULTY OFFICES 310 & 317	600	180	600	1, 2
VAV-305	FACULTY OFFICES 318, 319 & 320	900	270	900	1, 2
VAV-306	OPEN OFFICE 323	900	270	900	1, 2
VAV-401	FACULTY OFFICES 407 & 408	600	180	600	1, 2
VAV-402	N.M.R. 411	100	30	150	1, 2
VAV-403	FACULTY OFFICES 416 & 417	600	180	600	1, 2

NOTES:

1. ALL INFORMATION LISTED IS FROM EXISTING RECORD DRAWINGS AND SHALL BE USED FOR AIRFLOW SETPOINTS FOR NEW TERMINAL UNIT CONTROLLERS.
2. ALTERNATE #2: ALL WORK ASSOCIATED WITH THE SERIES FAN POWERED TERMINAL UNITS SHALL BE INCLUDED IN ALTERNATE #2.

LAB AIR VALVE SCHEDULE - CONTINUED

TAG	SERVES	VALVE LOCATION	SERVICE	MAXIMUM AIRFLOW (CFM)	OCCUPIED MINIMUM AIRFLOW (CFM)	UNOCCUPIED MINIMUM AIRFLOW (CFM)	INLET SIZE	MANUFACTURER/ MODEL #	NOTES
VV-301	FACULTY RESEARCH 304	FACULTY RESEARCH 304	GENERAL EXHAUST	540	90	-	8"	ACCUTROL / AVT6000	1 THROUGH 4
VV-302	FACULTY RESEARCH 304	FACULTY RESEARCH 305	FUME HOOD FH-3	750	300	-	10"	ACCUTROL / AVC6000	1 THROUGH 4
VV-303	FACULTY RESEARCH 304	FACULTY RESEARCH 304	SUPPLY	740	290	-	10"	ACCUTROL / AVT6000	1 THROUGH 4
VV-304	FACULTY RESEARCH 305	FACULTY RESEARCH 305	GENERAL EXHAUST	540	90	-	8"	ACCUTROL / AVT6000	1 THROUGH 4
VV-305	FACULTY RESEARCH 305	FACULTY RESEARCH 305	FUME HOOD FH-3	750	300	-	10"	ACCUTROL / AVC6000	1 THROUGH 4
VV-306	FACULTY RESEARCH 305	FACULTY RESEARCH 305	SUPPLY	740	290	-	10"	ACCUTROL / AVT6000	1 THROUGH 4
VV-307	CHEMICAL INTENSIVE 314	FACULTY RESEARCH 305	FUME HOOD FH-5	850	400	-	10"	ACCUTROL / AVC6000	1 THROUGH 4
VV-308	VALVE DEMOLISHED								
VV-309	CHEMICAL INTENSIVE 314	HALL 311	FUME HOOD FH-5	850	400	-	10"	ACCUTROL / AVC6000	1 THROUGH 4
VV-310	VALVE DEMOLISHED								
VV-311	CHEMICAL INTENSIVE 314	CHEMICAL INTENSIVE 314	SUPPLY	1,600	700	-	12" x 18"	ACCUTROL / AVT6000	1 THROUGH 4
VV-312	ANALYTICAL EQUIPMENT 315	ANALYTICAL EQUIPMENT 315	GENERAL EXHAUST	440	200	-	8"	ACCUTROL / AVT6000	1 THROUGH 4
VV-313	ANALYTICAL EQUIPMENT 315	ANALYTICAL EQUIPMENT 315	SUPPLY	340	100	-	8"	ACCUTROL / AVT6000	1 THROUGH 4
VV-314	INSTRUCTION LAB 313	INSTRUCTION LAB 313	GENERAL EXHAUST	1,360	430	200	12"	ACCUTROL / AVT6000	1 THROUGH 4
VV-315	VALVE DEMOLISHED								
VV-316	INSTRUCTION LAB 313	INSTRUCTION LAB 313	SUPPLY	1,360	430	200	12"	ACCUTROL / AVT6000	1 THROUGH 4
VV-317	PREP LAB 312	PREP LAB 312	GENERAL EXHAUST	540	140	-	8"	ACCUTROL / AVT6000	1 THROUGH 4
VV-318	VALVE DEMOLISHED								
VV-319	PREP LAB 312	PREP LAB 312	SUPPLY	540	140	-	10"	ACCUTROL / AVT6000	1 THROUGH 4
VV-320	INSTRUCTION LAB 322	INSTRUCTION LAB 322	GENERAL EXHAUST	1,360	430	200	12"	ACCUTROL / AVT6000	1 THROUGH 4
VV-321	INSTRUCTION LAB 322	INSTRUCTION LAB 322	SUPPLY	1,360	430	200	12"	ACCUTROL / AVT6000	1 THROUGH 4
VV-322	VALVE DEMOLISHED								
VV-323	FACULTY RESEARCH 306	CORRIDOR 316	GENERAL EXHAUST	880	130	-	10"	ACCUTROL / AVT6000	1 THROUGH 4
VV-324	FACULTY RESEARCH 306	CORRIDOR 316	FUME HOOD FH-3	750	300	-	10"	ACCUTROL / AVC6000	1 THROUGH 4
VV-325	FACULTY RESEARCH 306	FACULTY RESEARCH 306	SUPPLY	1,080	330	-	10"	ACCUTROL / AVT6000	1 THROUGH 4
VV-326	FACULTY RESEARCH 309	CORRIDOR 316	GENERAL EXHAUST	780	130	-	10"	ACCUTROL / AVT6000	1 THROUGH 4
VV-327	VALVE DEMOLISHED								
VV-328	FACULTY RESEARCH 309	FACULTY RESEARCH 309	SUPPLY	780	130	-	10"	ACCUTROL / AVT6000	1 THROUGH 4
VV-401	LAB B 405	PENTHOUSE	GENERAL EXHAUST	1,860	430	290	12" x 18"	ACCUTROL / AVT6000	1 THROUGH 4
VV-402	LAB C 404	PENTHOUSE	GENERAL EXHAUST	1,860	390	280	12" x 18"	ACCUTROL / AVT6000	1 THROUGH 4
VV-403	LAB B 405	PENTHOUSE	SUPPLY	1,860	430	290	12" x 18"	ACCUTROL / AVT6000	1 THROUGH 4
VV-404	LAB C 404	PENTHOUSE	SUPPLY	1,540	570	390	12" x 18"	ACCUTROL / AVT6000	1 THROUGH 4
VV-405	PREP 403	PENTHOUSE	FUME HOOD FH-4	800	600	600	10"	ACCUTROL / AVC6000	1 THROUGH 4
VV-406	VALVE DEMOLISHED								
VV-407	PREP 412	PENTHOUSE	SUPPLY	720	300	200	10"	ACCUTROL / AVT6000	1 THROUGH 4
VV-408	PREP 403	PENTHOUSE	SUPPLY	720	420	290	10"	ACCUTROL / AVT6000	1 THROUGH 4
VV-409	VALVE DEMOLISHED								
VV-410	FACULTY RESEARCH 401	PENTHOUSE	SUPPLY	940	150	130	10"	ACCUTROL / AVT6000	1 THROUGH 4
VV-411	FACULTY RESEARCH 401	PENTHOUSE	GENERAL EXHAUST	940	150	130	10"	ACCUTROL / AVT6000	1 THROUGH 4
VV-412	FACULTY RESEARCH 409	PENTHOUSE	GENERAL EXHAUST	625	130	-	10"	ACCUTROL / AVT6000	1 THROUGH 4
VV-413	FACULTY RESEARCH 409	PENTHOUSE	SUPPLY	825	330	-	10"	ACCUTROL / AVT6000	1 THROUGH 4
VV-414	FACULTY RESEARCH 409	PENTHOUSE	FUME HOOD FH-3	750	300	-	10"	ACCUTROL / AVC6000	1 THROUGH 4
VV-415	VALVE DEMOLISHED								
VV-416	FACULTY RESEARCH 415	PENTHOUSE	SUPPLY	825	150	130	10"	ACCUTROL / AVT6000	1 THROUGH 4
VV-417	FACULTY RESEARCH 415	PENTHOUSE	GENERAL EXHAUST	825	150	130	10"	ACCUTROL / AVT6000	1 THROUGH 4
VV-418	VALVE DEMOLISHED								
VV-419	FACULTY RESEARCH 420	PENTHOUSE	GENERAL EXHAUST	980	170	130	10"	ACCUTROL / AVT6000	1 THROUGH 4
VV-420	FACULTY RESEARCH 420	PENTHOUSE	SUPPLY	980	170	130	10"	ACCUTROL / AVT6000	1 THROUGH 4
VV-421	VALVE DEMOLISHED								
VV-422	VALVE DEMOLISHED								
VV-423	ORGANIC CHEMISTRY LAB 419	ORGANIC CHEMISTRY LAB 419	FUME HOOD FH-5	850	400	-	10"	ACCUTROL / AVC6000	1 THROUGH 4
VV-424	ORGANIC CHEMISTRY LAB 419	ORGANIC CHEMISTRY LAB 419	FUME HOOD FH-5	850	400	-	10"	ACCUTROL / AVC6000	1 THROUGH 4
VV-425	ORGANIC CHEMISTRY LAB 419	ORGANIC CHEMISTRY LAB 419	FUME HOOD FH-5	850	400	-	10"	ACCUTROL / AVC6000	1 THROUGH 4
VV-426	VALVE DEMOLISHED								
VV-427	VALVE DEMOLISHED								
VV-428	ORGANIC CHEMISTRY LAB 419	PENTHOUSE	FUME HOOD FH-5	850	400	-	10"	ACCUTROL / AVC6000	1 THROUGH 4
VV-429	PREP 412	PENTHOUSE	FUME HOOD FH-4	800	600	600	10"	ACCUTROL / AVC6000	1 THROUGH 4
VV-430	ORGANIC CHEMISTRY LAB 419	PENTHOUSE	SUPPLY	1,630	730	-	12" x 18"	ACCUTROL / AVT6000	1 THROUGH 4
VV-431	ORGANIC CHEMISTRY LAB 419	PENTHOUSE	SUPPLY	1,630	730	-	12" x 18"	ACCUTROL / AVT6000	1 THROUGH 4
VV-432	ORGANIC CHEMISTRY LAB 419	PENTHOUSE	FUME HOOD FH-5	850	400	-	10"	ACCUTROL / AVC6000	1 THROUGH 4
VV-433	ORGANIC CHEMISTRY LAB 419	PENTHOUSE	SUPPLY	1,630	730	-	12" x 18"	ACCUTROL / AVT6000	1 THROUGH 4
VV-434	LAB A 413	PENTHOUSE	GENERAL EXHAUST	1,860	300	280	12" x 18"	ACCUTROL / AVT6000	1 THROUGH 4
VV-435	ORGANIC CHEMISTRY LAB 419	PENTHOUSE	FUME HOOD FH-5	850	400	-	10"	ACCUTROL / AVC6000	1 THROUGH 4
VV-436	LAB A 413	PENTHOUSE	SUPPLY	1,340	400	280	12" x 18"	ACCUTROL / AVT6000	1 THROUGH 4
VV-437	STORAGE 406	PENTHOUSE	GENERAL EXHAUST	100	100	-	6"	ACCUTROL / AVT6000	1 THROUGH 4

NOTES:

1. MAXIMUM AIR PRESSURE DROP SHALL NOT EXCEED 0.3".
2. MAXIMUM DISCHARGE N.C. AT 1.5" S.P. = 40.
3. "BASIS OF DESIGN" SHALL BE ACCUTROL, APPROVED EQUALS BY ROSEMOUNT, TRIATEK OR TEK-AIR ARE ACCEPTABLE.
4. ALTERNATE #1: PROVIDE LAB AIR VALVE, INCLUDING SPECIFIED ACCESSORIES (FUME HOOD VALVE CONTROLLERS, FUME HOOD MONITORS, SASH SENSORS, ETC.), BY ACCUTROL AS A PREFERRED BRAND ALTERNATE.

MCKIM&CREED
Venture IV Building, Suite 500
1730 Varsity Drive
Raleigh, North Carolina 27606
Phone: (919) 233-8091, Fax: (919) 233-8031
www.mckimcreed.com

Western Carolina UNIVERSITY

NORTH CAROLINA PROFESSIONAL SEAL 045325 ENGINEER WILLIAM M. THOMAS 3-3-23

REV	REVISION DESCRIPTION	DATE

STILLWELL BUILDING HVAC CONTROLS REPLACEMENT WESTERN CAROLINA UNIVERSITY

SCO ID: 22-24466-01A
CODE: 42126 ITEM: 316

DATE	3/2/2023
M&C PROJ. #	07020-0003
DRAWN	JMT
DESIGNED	WTR
CHECKED	WTR
PROJ. MGR	WTR

SCALE
HORIZONTAL:
AS NOTED

VERTICAL:
N/A

BID DOCUMENTS

MECHANICAL SCHEDULES

M601

I:\07020\0003\ENG\80-DRAWINGS\86-DESIGN\86HVAC DESIGN\MECH SCHEDULES.DWG 03/03/2023 10:53:54 JENNIFER CARVER